Specifying Safety & Maintenance Technology into new Projects

REFCOMM BAHRAIN

8-12 NOVEMBER 2015

Product Manager
Andrew Worley

Experience In Motion

Agenda:

- Decoking System Introduction
- Mechanical & Structural Specifications
  - Access
  - Equipment

- Safety
  - Remote Drum Monitoring (What/Why?)
  - Automation
- Summary

Decoking System Introduction:

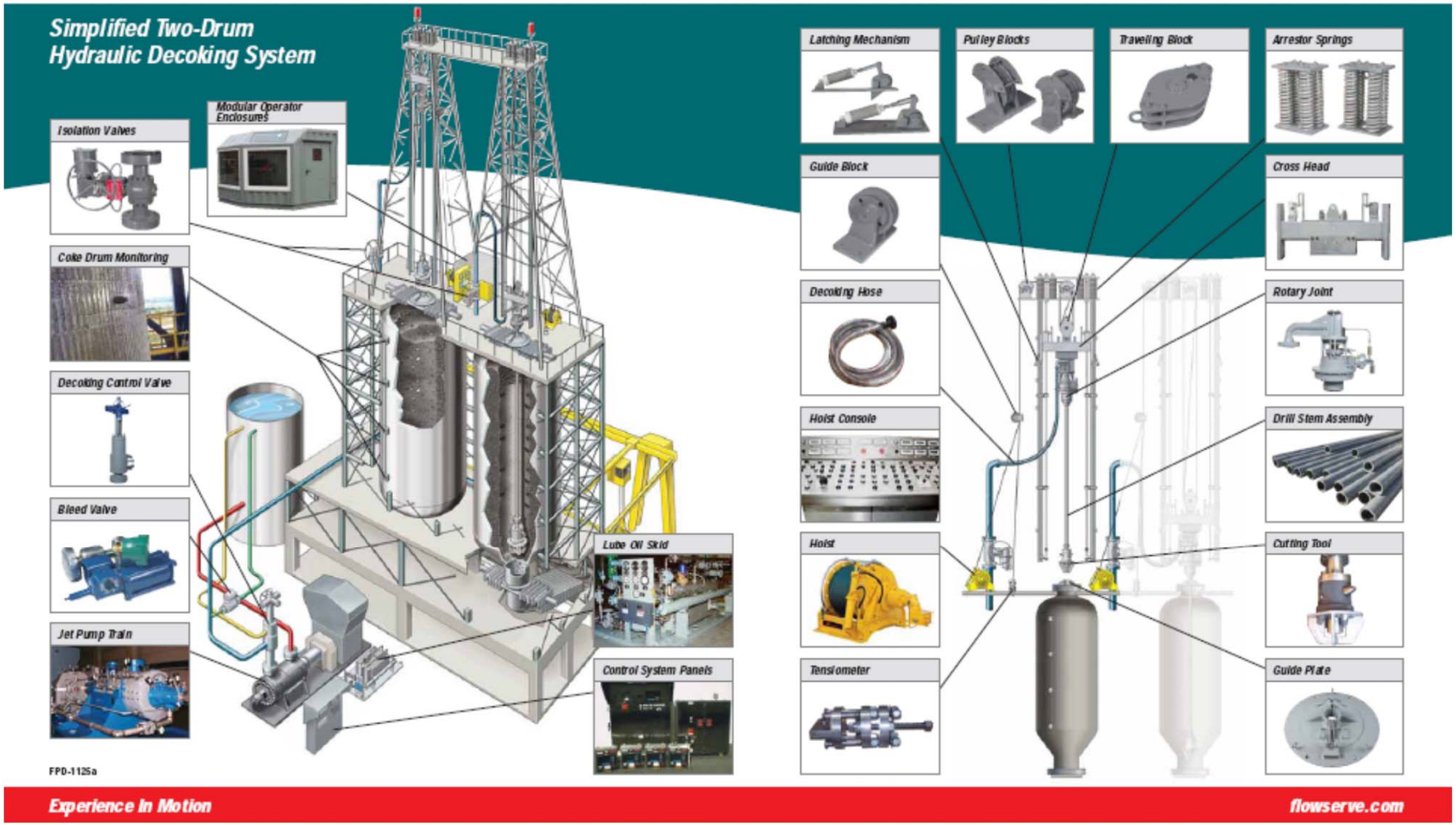

Special Products

Decoking System Introduction

Coke Boring Stage

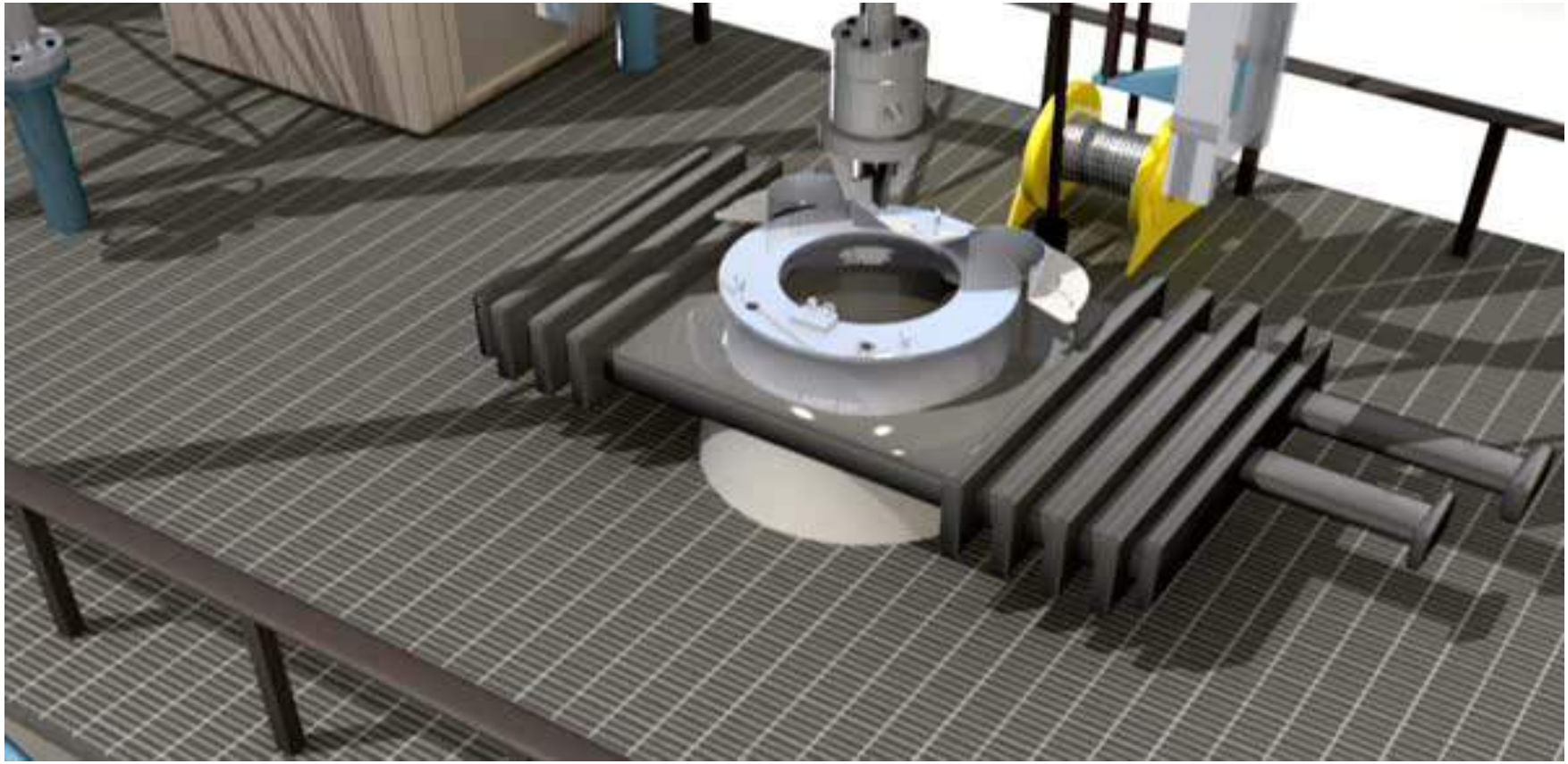

Decoking System Introduction

Coke Cutting Stage

Access

Access

- Grade Maintenance Access
  - Pump train
    - Overhead Crane
  - DCV
    - No P-Trap
  - Bleed Valve

Access

- Tower Maintenance Access
  - Rotary Joint
    - Lubrication & Change out
  - Crosshead
    - Maintenance & Change out
    - Limit Switch Access
  - Pulley Blocks
    - Guide Block
    - Multiple Drum Access

Access

- Tower Maintenance Access
  - Rotary Joint
    - Lubrication & Change out
  - Crosshead
    - Maintenance & Change out
    - Limit Switch Access
  - Pulley Blocks
    - Guide Block
    - Multiple Drum Access

Equipment

Equipment Repair Maintenance

- Considerations
  - MTBR
  - Field Repairs
- Cartridge-Design
  - Pump
  - Decoking Control Valve
  - Rotary Joint Dual Seal
  - Autoshift Cartridge

Standard Decoking Jet Pump

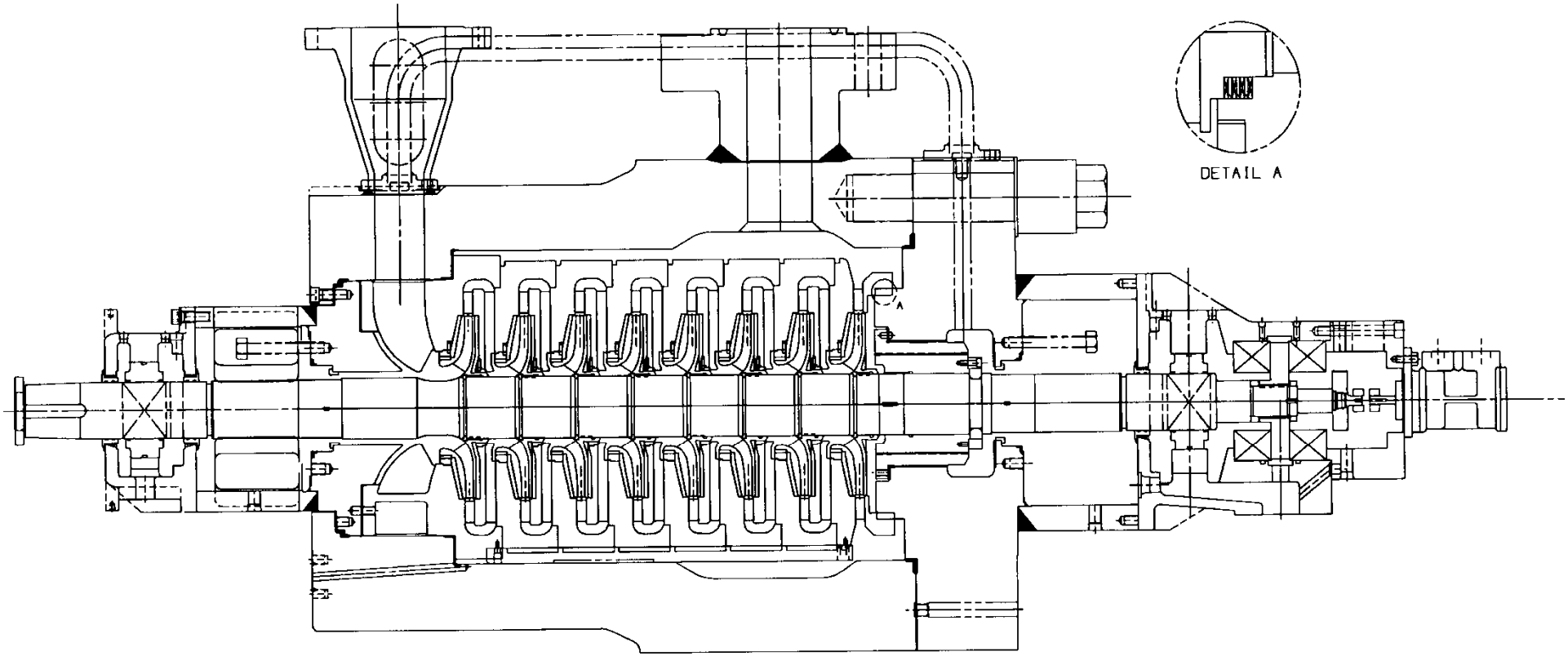

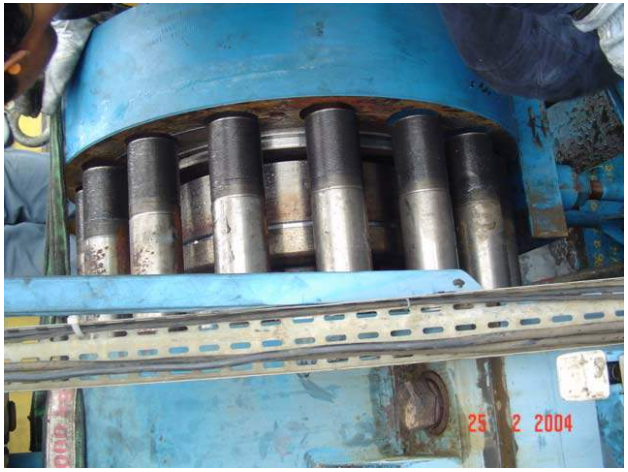

Follow proper Bolt Torquing Procedure (IOM Table)

Note: Rotor Assembly is "pre-set" at the factory by Flowserve. No additional setting is required

Control Valve: Cartridge DCV Upgrade & ADCV

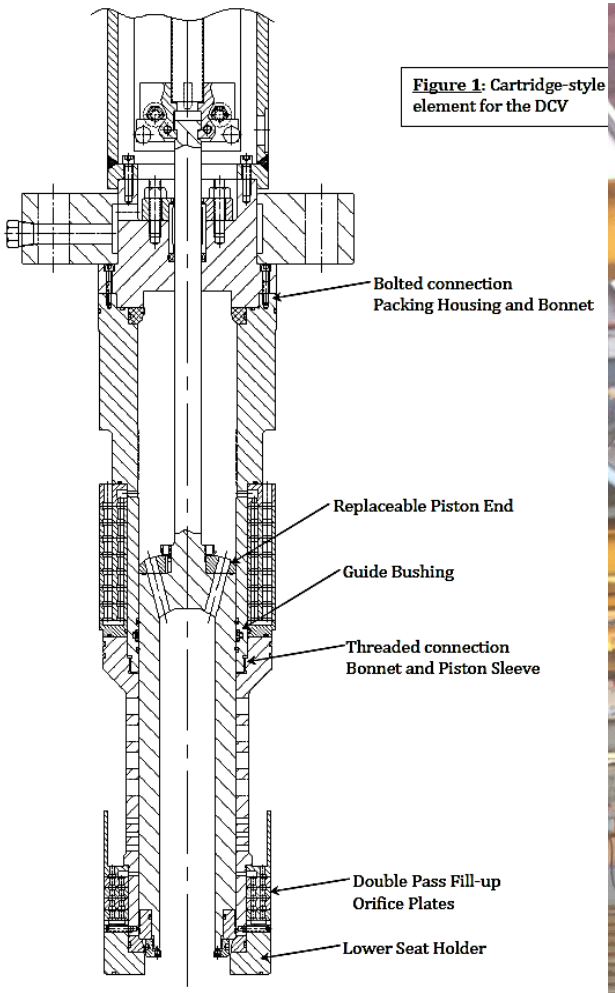

Figure 1: Cartridge-style element for the DCV

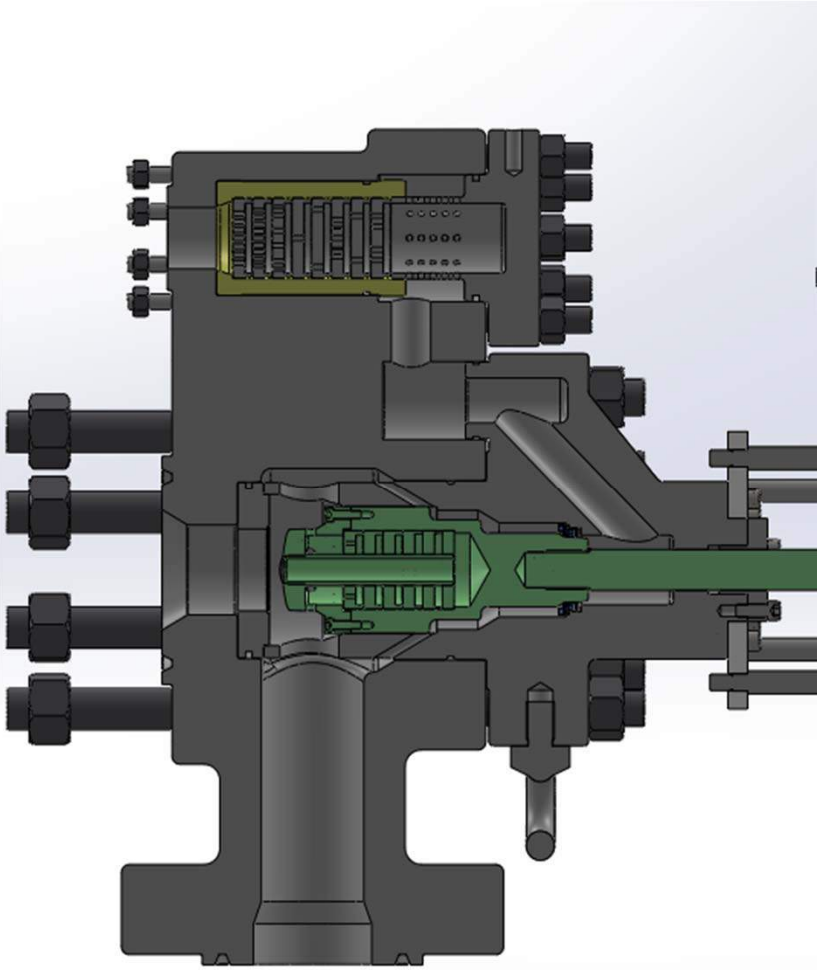

Rotary Joint Dual Seal Cartridge

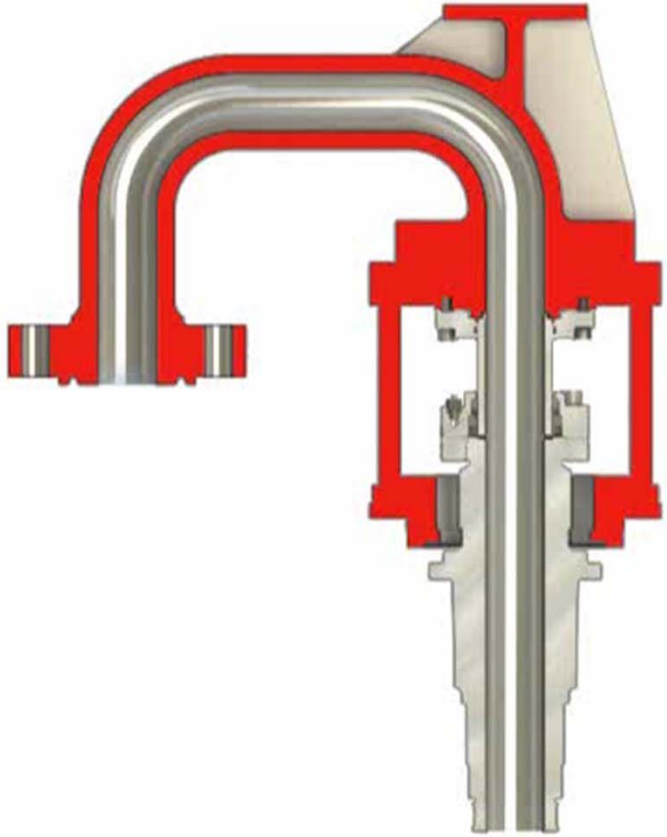

Equipment Preventative Maintenance

Cutting System Drivers

Rotary Joint

Winch

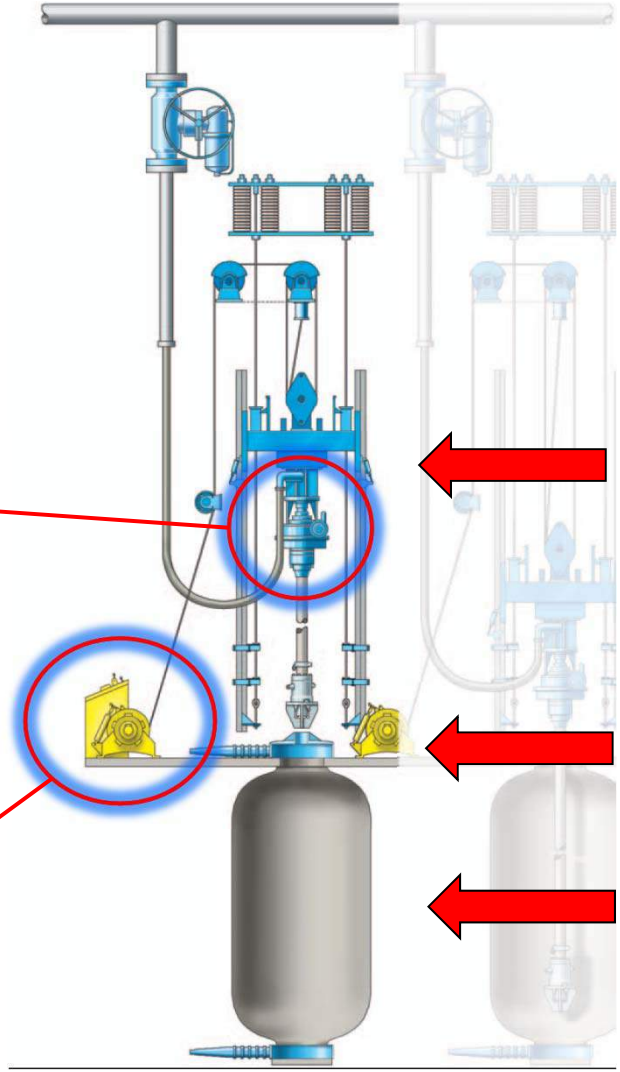

Special Products

Actuator History

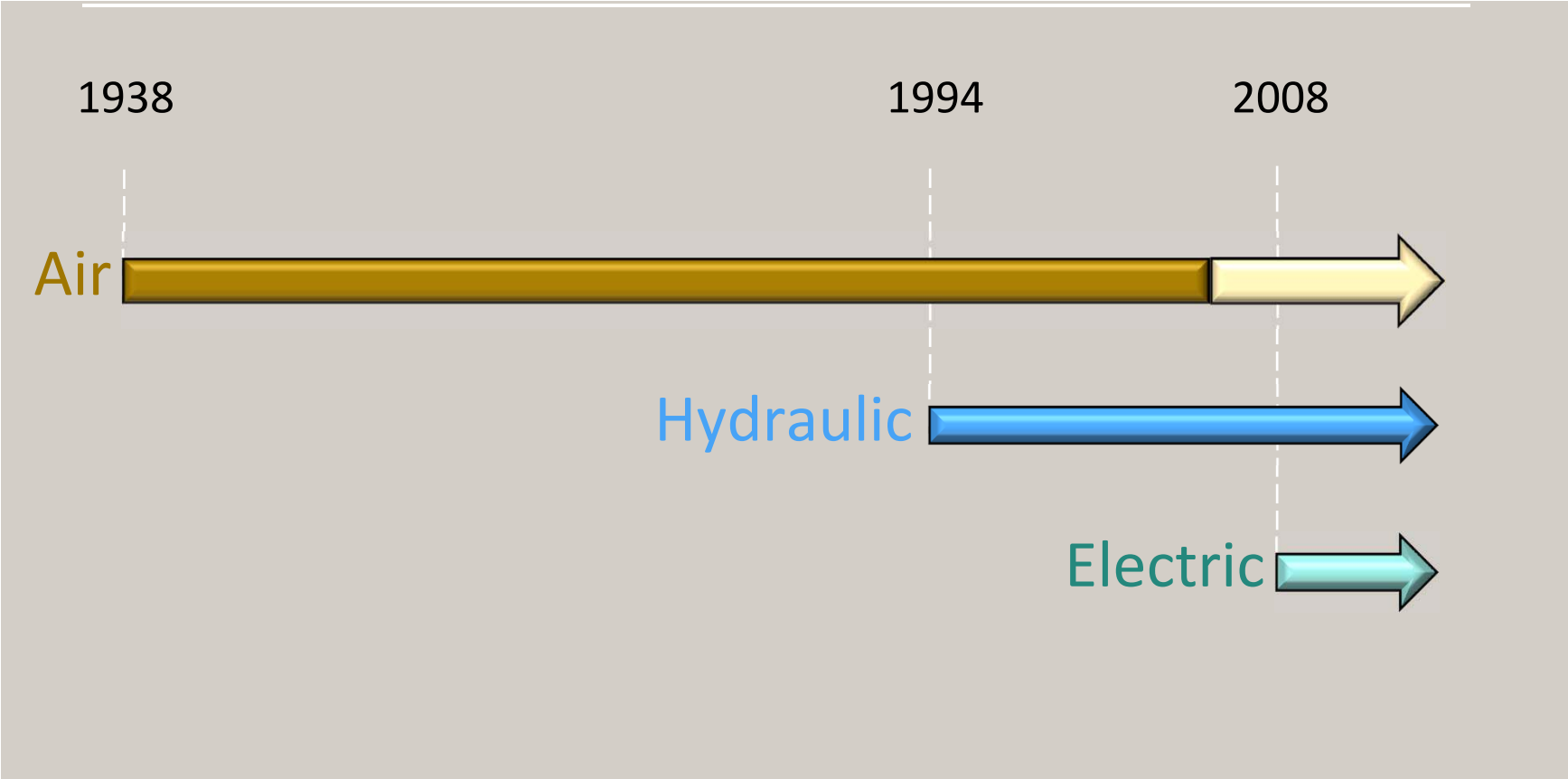

Hydraulic Motors

Main technical reasons (1994):

- Improve general working conditions for operation personnel (handling, safety)
- Eliminate operation issues in very cold climate
- Precision control of equipment for operator

Cons:

- Space for Hydraulic Power Unit on the deck
- Intensive piping (3 lines from HPU to each motor)
- Cleanness of the hydraulic oil is key for trouble free operation

Hydraulic Driven Decoking Equipment

Scope (supplied by Flowserve)

- Hydraulic motors with Winch & Rotary Joint
- Supply, Return & Drain line hydraulic hose bundle (running along the Decoking hose)
- Hydraulic power unit (HPU) approx. 3000 psi (211 kg/cm²)

Utilities (by refinery)

- Electrical LV power supply – 100 HP (75 kW) for HPU
- Cooling air or water for HPU

Why Electric Motors?

Main technical reasons (2008):

- Proven technic was available and affordable
- Reduce installation and maintenance efforts

Cons:

- Space for electric motors
- Limitation in cable length

Key Design Parameter Electric Driven Winch

Climate conditions:

- Temperature: -76 °F (-60°C) … +130°F (+55°C)
- Ambient: heavy duty industrial conditions with high exposure to dust and steam

Coker specific operation requirements:

- 9.900 lbs line pull
  - 39.600 lbs (18 t) pullout force at drill stem
- High torque at low speed
- 130 ft/min (40 m/min) line speed
  - 4 minutes transfer time top to bottom in largest drums
- Minimum stall capability of 10 min
  - Required for cases of Coke Bed Collapse
  - Tested for 55 min without significant temperature increase (ambient 68°F)

Electric Motor - Design Features

- E-motor, flameproof
  (ATEX II 2 G EX DE IIC T4)
- Low voltage squirrel cage induction motor
  Winch: 40 hp (30 kW)
  Rotary Joint: 15 hp (11 kW)
- Winding temperature 3x PTC
- Internal shaft encoder (for winch)
- Forced ventilation by separate fan motor (if applicable)
- Rated Stall capability for 10 min (tested for 55 minutes)

Design Parameter Electric Driven Rotary Joint

Climate conditions:

- Temperature: -76 °F (-60°C) … +130°F (+55°C)
- Ambient: heavy duty industrial conditions with high exposure to dust and steam

Coker specific operation requirements:

- Drill Stem speed range 0-18rpm
  - Average Boring Speed 10-15 rpm
  - Average Cutting Speed 5-10 rpm
- Stall Torque at drill stem of 9.000 ft-lbs (12.200 Nm)
- Minimum stall capability of 10 minutes
  - Required for cases of Coke Bed Collapse
  - Tested for 55 min without significant temperature increase (ambient 68°F)

Basic Layout Electric Drives

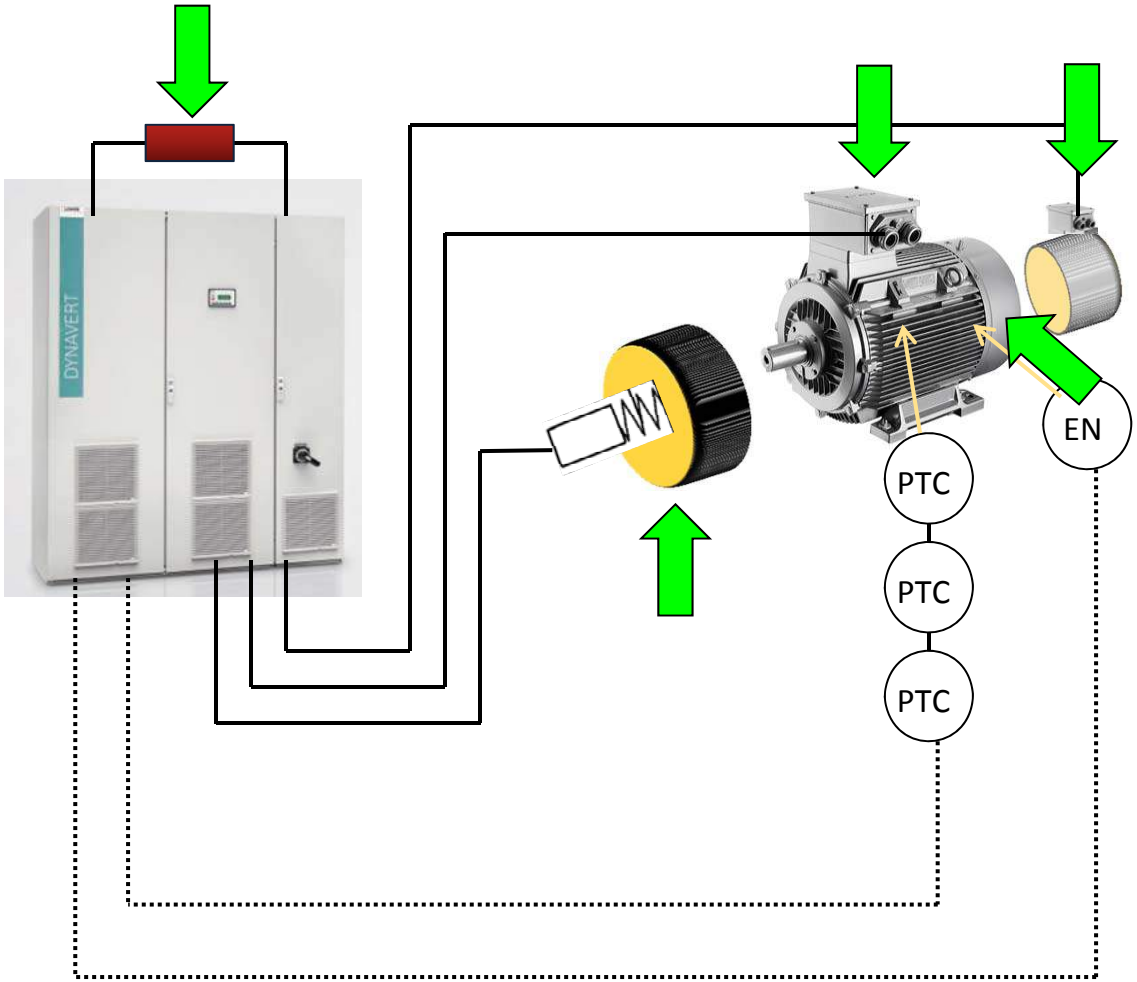

- Low voltage E-Motor
- Additional fan motor (if applicable)
- Encoder (for winch)
- Spring return electromagnetic disc brake (for winch)
- Variable frequency drive with brake resistance

Variable Frequency Drive - Design Features

- Redundant set of VFDs: selectable for OPERATION or STANDBY
- Panel mounted preferred in safe area (Area rated panels available)
- Max. cable distance between VFD and motor 3,250 ft (1000 m)
- Field oriented control with Set / Actual speed value comparison
  - “Anti slip” for winch motor – motor can hold the cutting equipment in position without movement (rotation); standstill operation while the brake is fully open
- Fast stop function (for winch) to lower motor speed quickly


25 8 2009


2012/09/05


24 8 2009

Safety

Remote Drum Monitoring: Why?

The water jet creates a specific sound on a clean drum wall

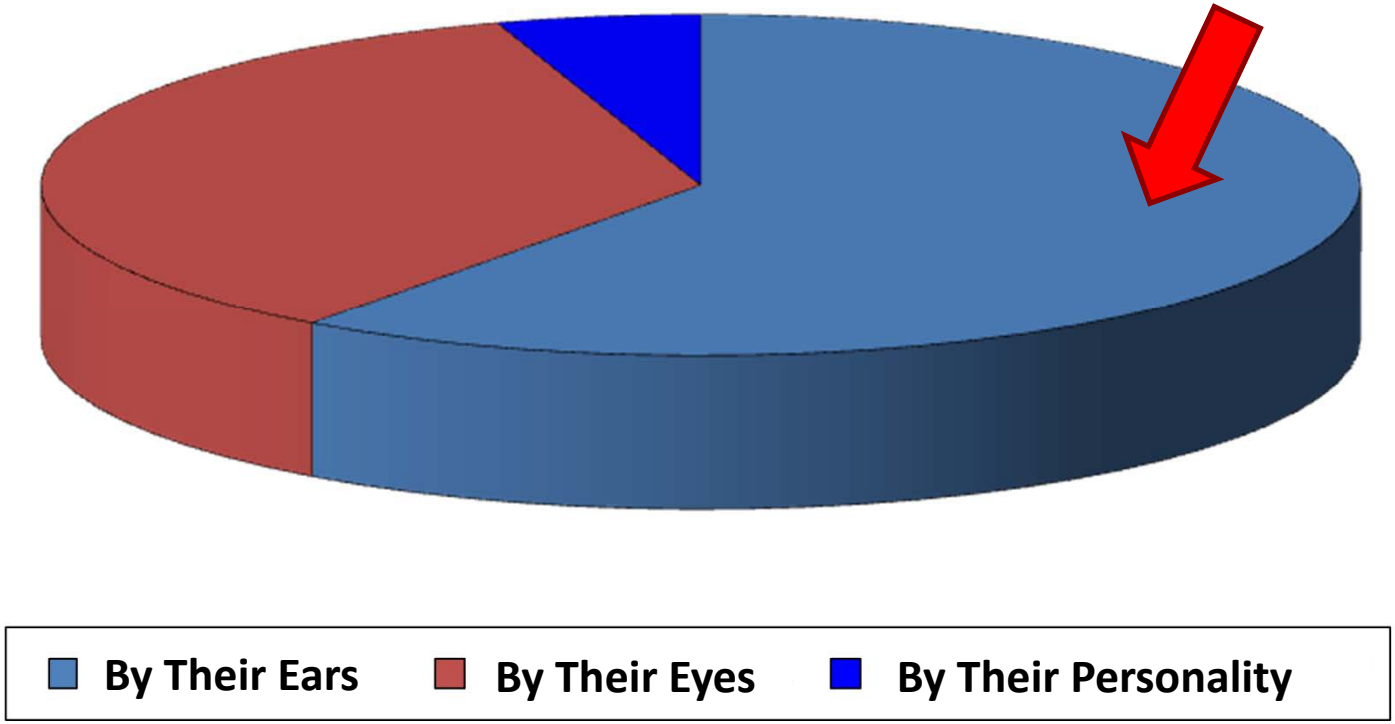

Remote Drum Monitoring: Why?

Challenges Posed:

- Low Visibility
- Noise Variation / Inaudible
- Safety:
  - High Temperature/Pressure Gases & Liquids Present
  - Combustible Materials/Gases

Goal: Eliminate challenges, heighten safety through *remote cutting*, and increase operator efficiency by quantifying drum cleanliness & enhancing operator awareness.

Remote Drum Monitoring: Vibration

Remote Drum Monitoring: Vibration

- Vibration sensors designed for high temperature application
- Area rated
- Minimum invasive attachment
- Easy replacement/maintenance
- Standard Drum Vibration Monitoring System Consists of 5 Probes

Remote Monitoring: Vibration & Audio

DAQ System

- Reprogrammable Embedded System (Real-Time OS & FPGA)
- High Speed :
  - Data Acquisition/Signal Processing
  - Data Analysis (FFT, RMS, Filter)
- (x8) Slot Rack For Custom I/O (customizable.2-4-6 drum system)
- (x3) MODBUS Serial Communication Interface

Drum Monitoring: Audio

- Standard Audio System Consists of 3 Microphones
- Surface Mounted on Junction Box for Easy Installation/Replacement

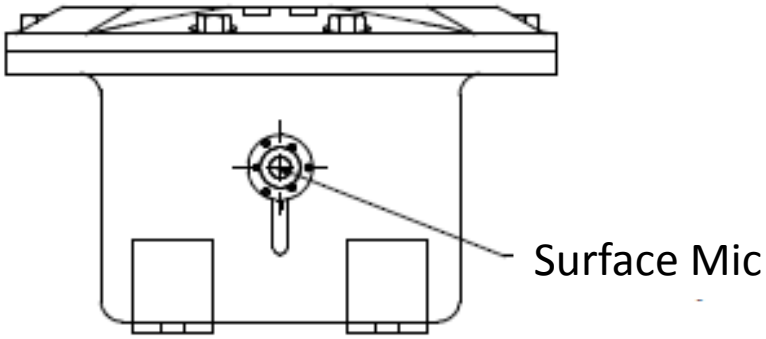

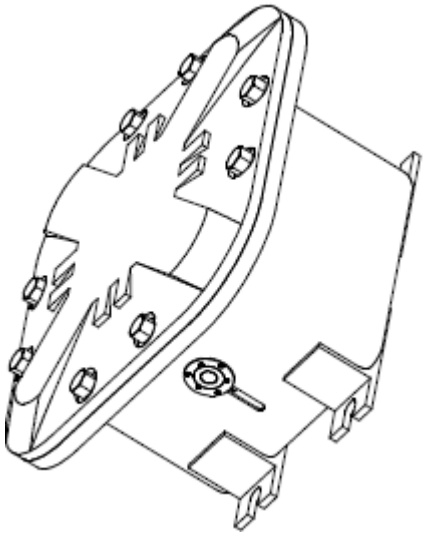

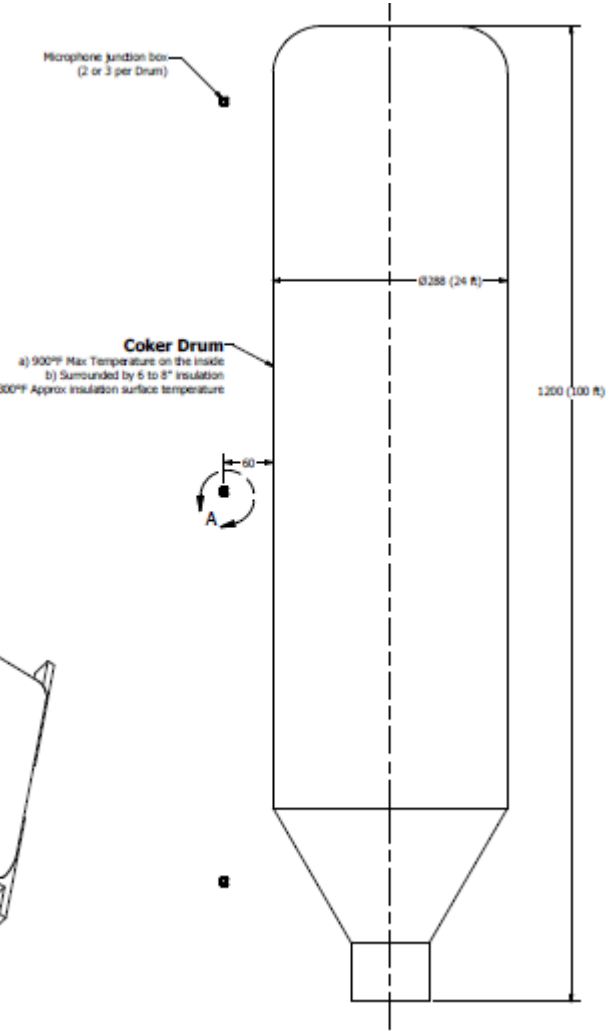

Drum Monitoring: Video

- Standard Camera Issues
  - Corrosion
  - Coke Fine Accumulation
- Self Cleaning
- Pan – Tilt – Zoom
- Area Certification
- Engineered Placement
  - Cutting Deck
  - Winches
  - Pit

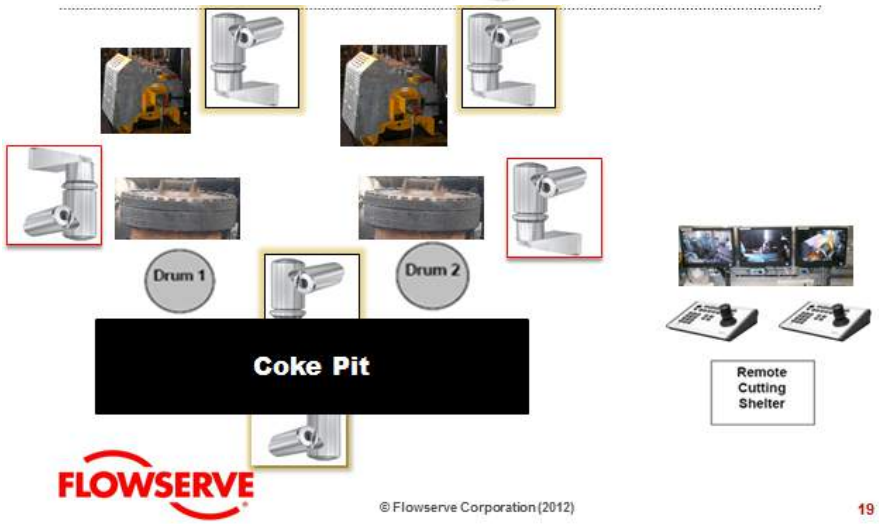

Drum Monitoring: Video

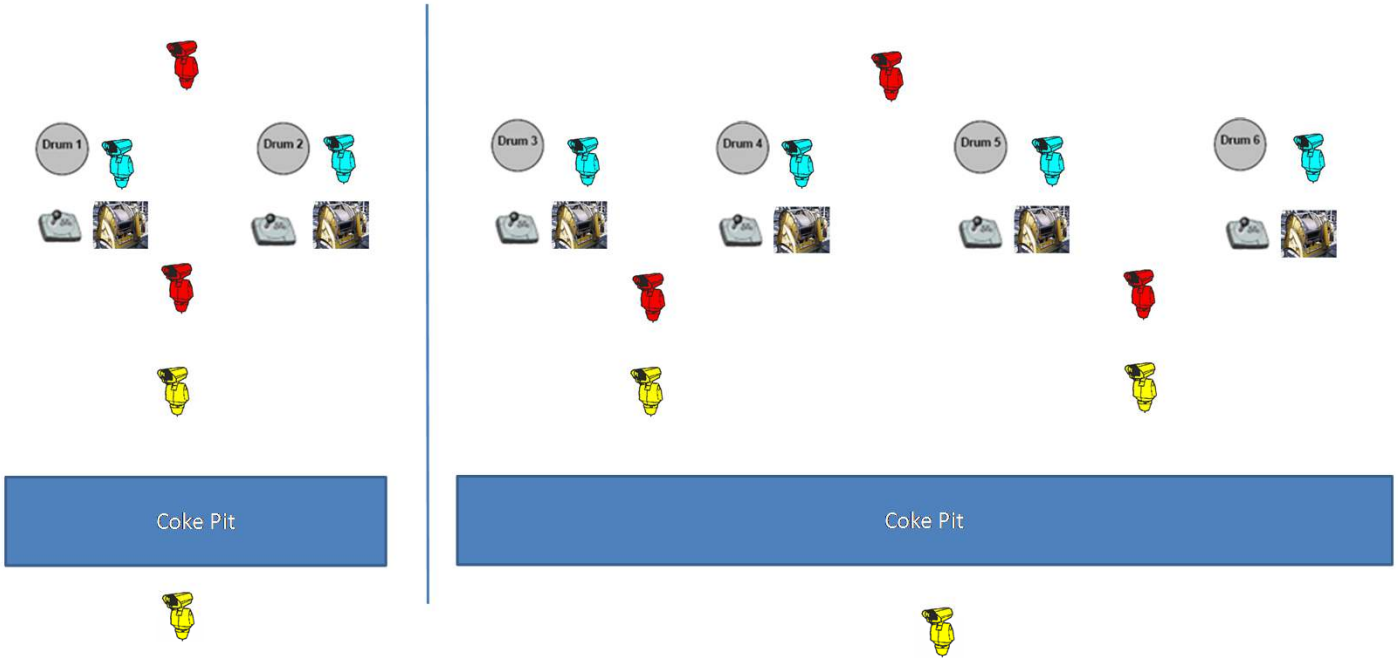

- Local cutting console for maintenance or manual cutting
- Winch camera - (6) mounted on cutting deck monitoring winch (Fixed)
- Deck camera - (5/6) mounted on cutting deck monitoring the top of the drum (Pan Tilt Zoom)
- Pit camera (5) - mounted between drums or near grade monitoring pit and chutes (Pan Tilt Zoom)

Drum Monitoring: HMI Overview

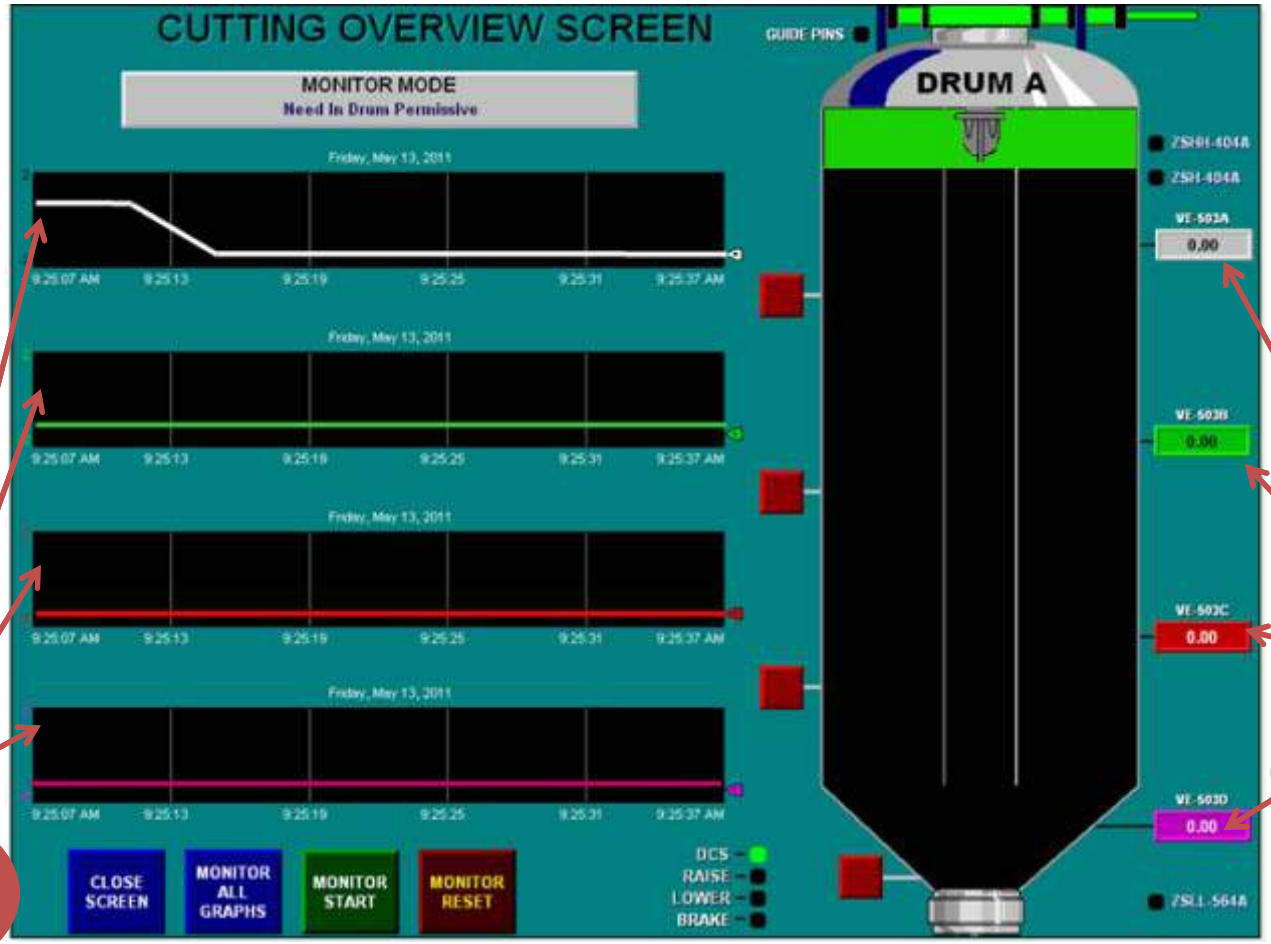

Vibration Strip Charts

Instantaneous Vibrations

Special Products

Drum Monitoring: HMI Overview

Field Information

Push Button Controls

Drum Monitoring: HMI Overview

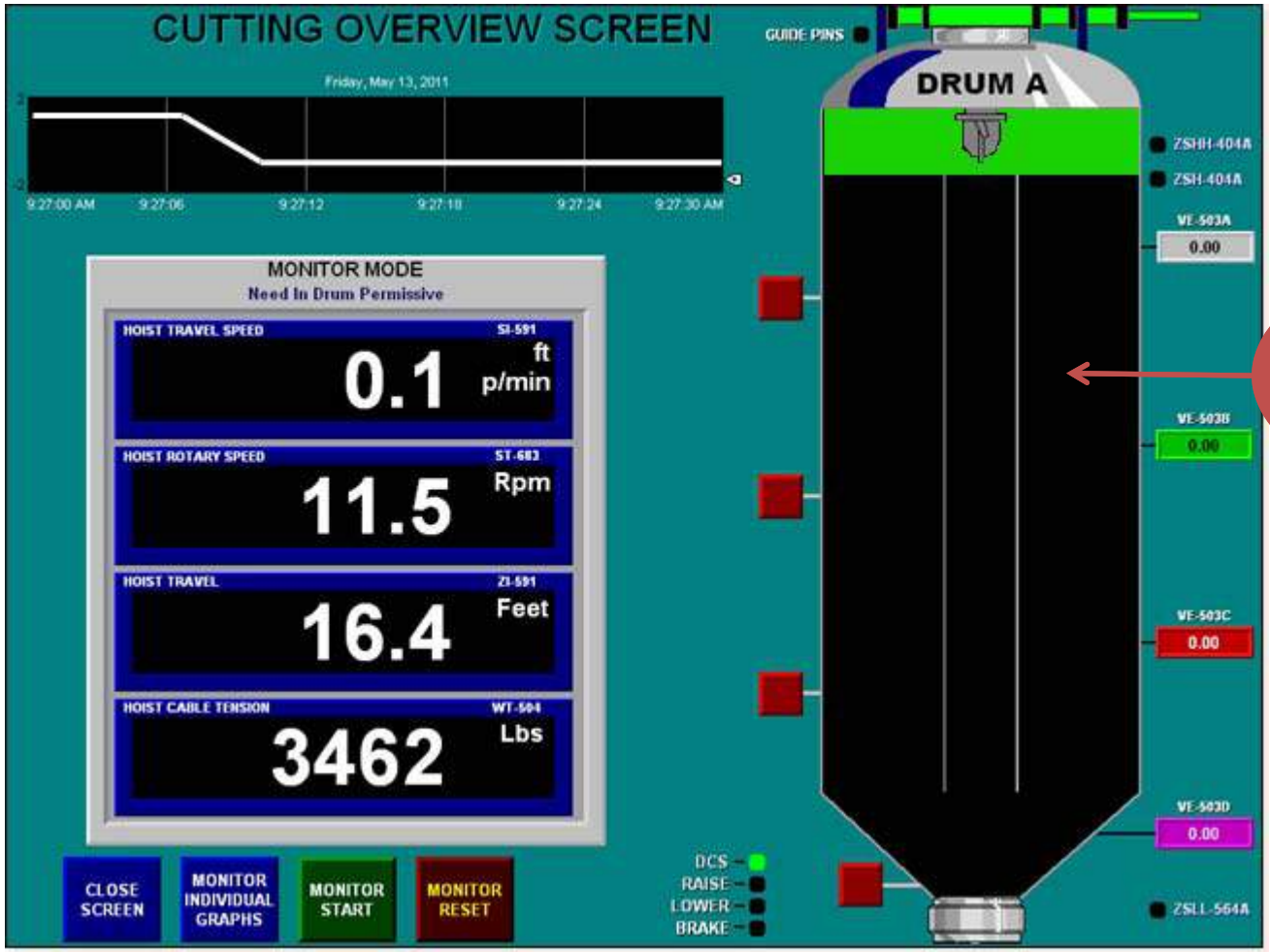

Drum Cleanliness Will Be Indicated Here

Drum Monitoring: HMI Overview

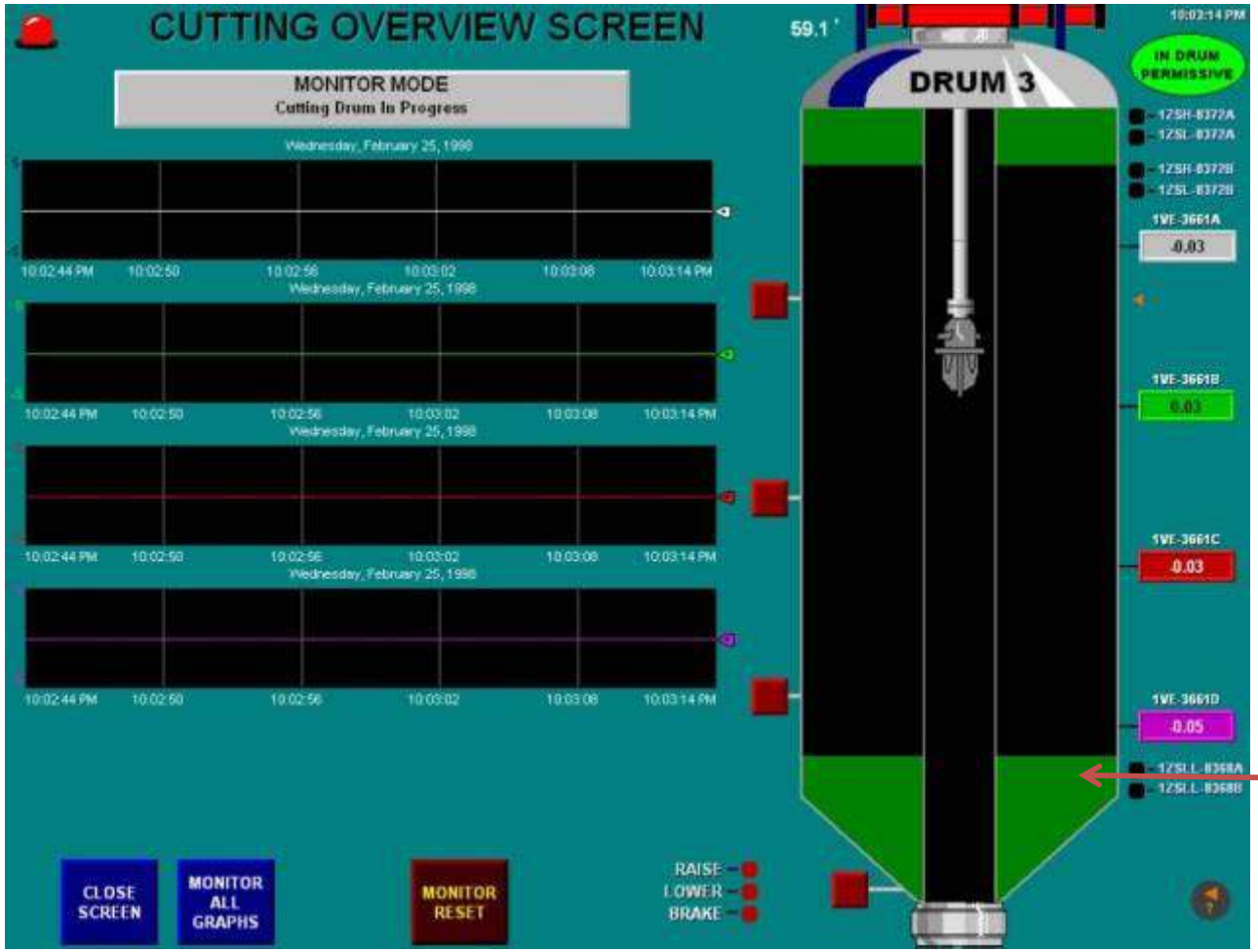

Example Indicating Cone Section is Clean

Drum Monitoring: Operator Control Panel

Drum Monitoring: Operator Control Panel

Drum Monitoring: Operator Control Panel

Automation

What:

Automatically transitions the Autoshift tool from *bore* to *cut* mode and completes the decoking process by accurately monitoring drum cleanliness.

How:

Utilizing the Vibration Monitoring System, along with the PLC interlocks, *Automation* can be achieved.

Automation: Benefits

- *Improved cutting personnel safety*
  - Automated cutting system integrated with PLC interlocks
    - Minimize probability of operator mistake
    - Eliminates shortcuts sometimes taken by cutting personnel
  - Standardized cutting procedures reduce risk of aggressive cutting practices
- *Improved equipment reliability*
- *Process efficiency and consistency*
  - Advance program and cutting tool as soon as possible
  - Consistent cutting times with standardized cutting procedure
- *Data recording for process optimization or troubleshooting*
  - Cycle Time Optimization
  - Ability to access data for troubleshooting in case of event

Summary

- Access
  - Ensure Structure Access is part of the specifications
  - Participation with equipment vendor feedback in Model Reviews
- Maintenance
  - Consider PM work & MTBR in Equipment Selection
- Safety
  - Remote Cutting & Automation MUST be specified into the contract

THANK YOU.

QUESTIONS?