Advanced Process Control

Handling Delayed Coker Disturbances with APC

Author: **Dinesh Jaguste** - Yokogawa India

Presenter: Arnaud Nougues

Yokogawa Europe Solutions B.V.

E-mail : arnaud.nougues@nl.yokogawa.com

REFCOMM BUDAPEST 2-5 Oct 2017

Delayed Coker Unit Overview

- Lumus Technology
- 2 Heaters and 4 Coke Drums
- 24 hour Cycle Time
- Drum Switch Every 12 hours

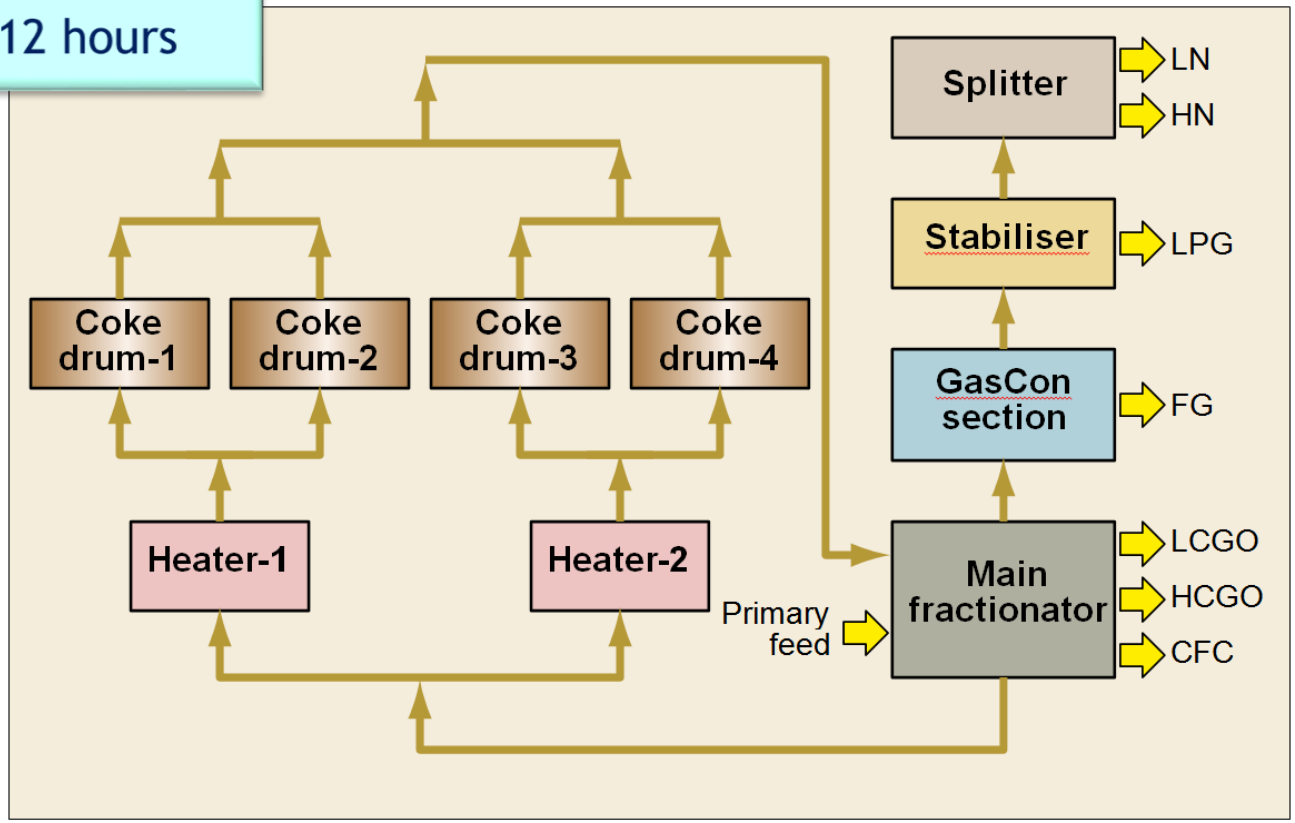

DCU – Semi-batch Operation

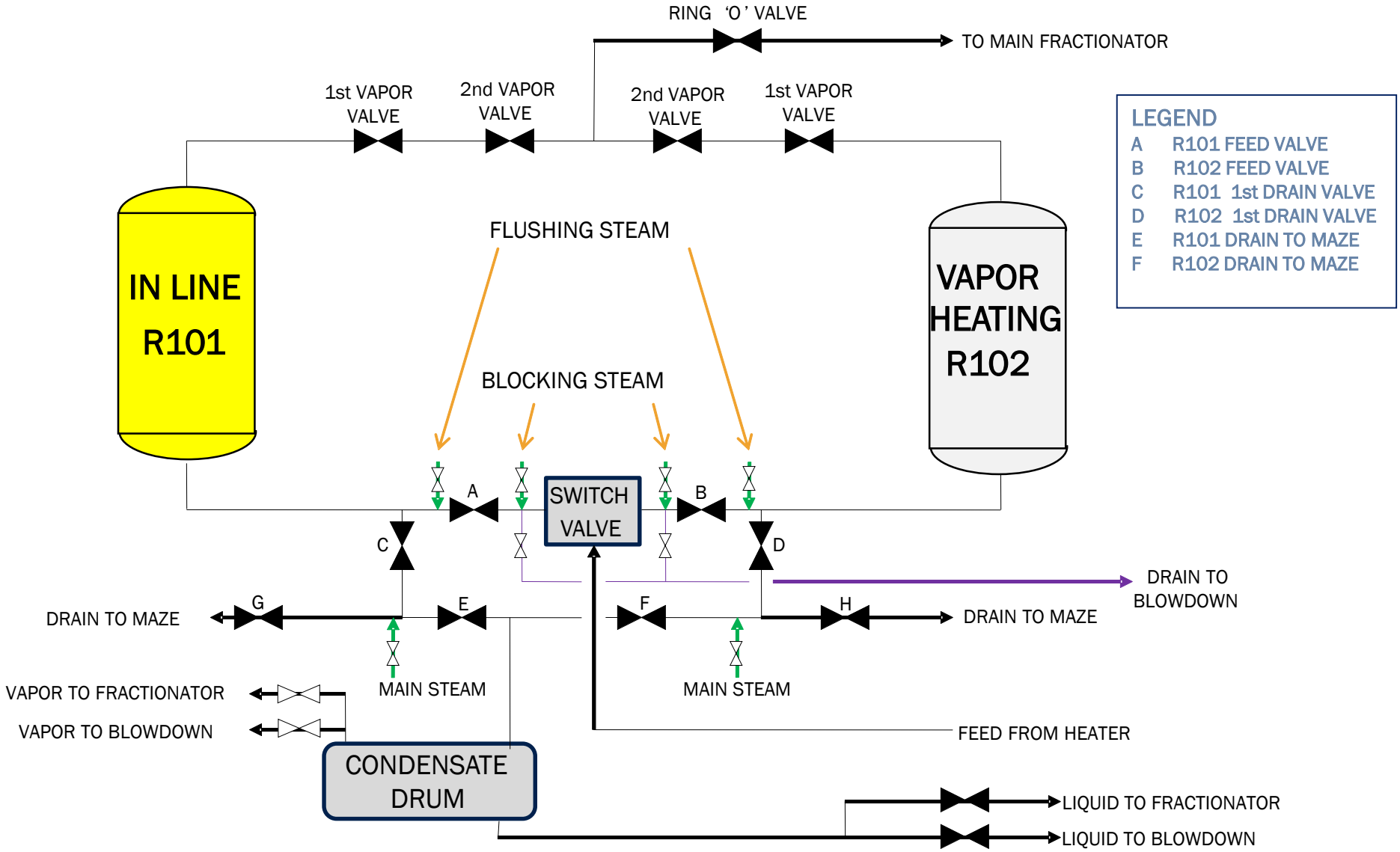

Impact of Semi-batch Operation on Fractionator

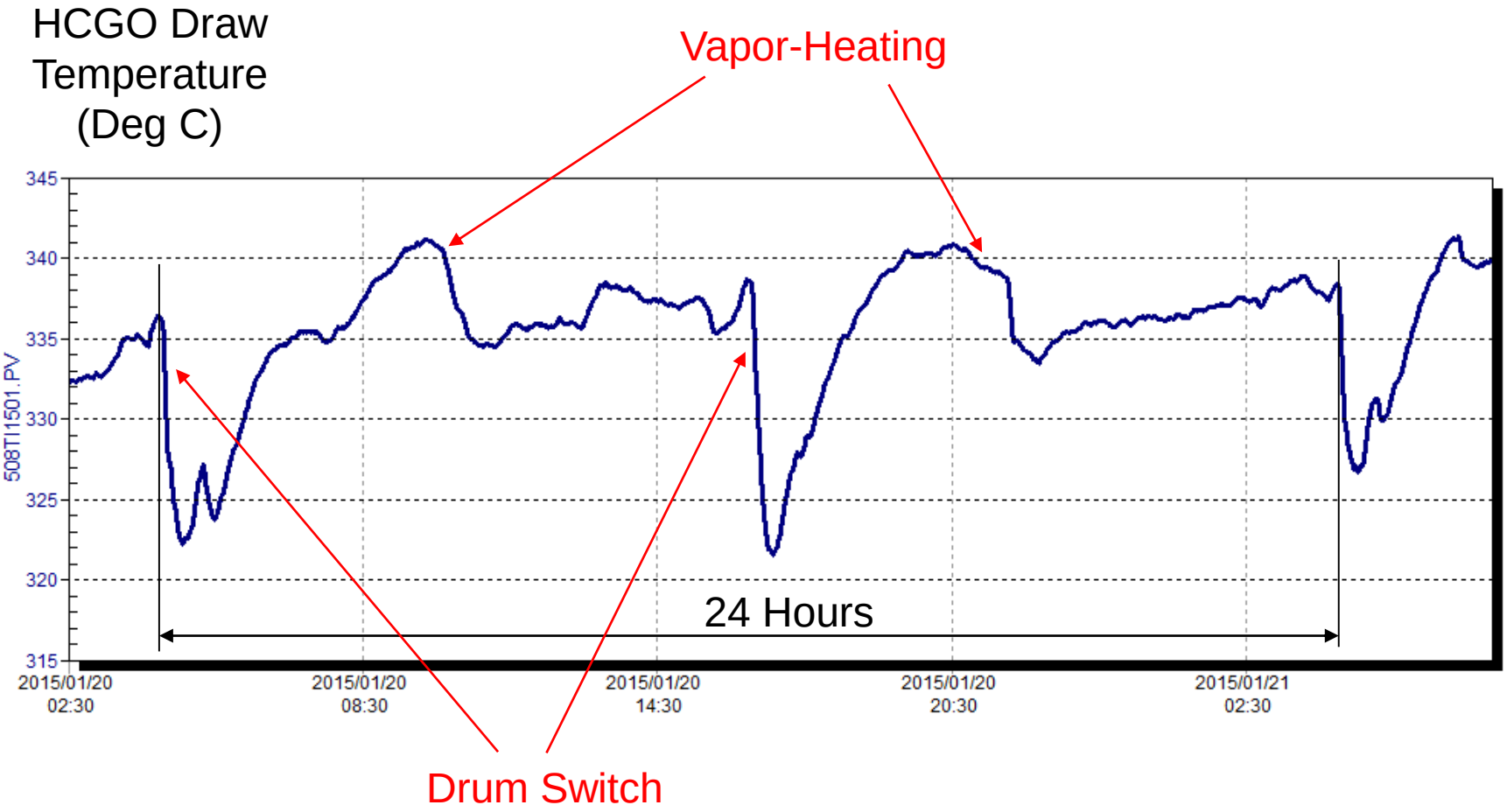

- Two Drum Switches in 24 Hours
- Main Fractionator is continuously disturbed

DCU-APC Challenges

- Semi-batch operation
  - Disturbances caused by drum switch and vapor-heating
  - Continuous changes in mass and enthalpy feed
- Drum switches involve manual operations in the field
  - Extent of disturbance changes in each event
- Unmeasured disturbances
  - Absence of Drum Vapor Flow measurement
- Continuous Operator attention and intervention
- Step test is difficult and takes longer time
- Feed Maximization: Coke drum capacity utilization

Design Concepts

- Automatic Drum Switch (discrete) Events Detection
- Generation of Drum Switch disturbance functions
- Use of Drum switch disturbances for Step Response modeling
- Intermediate variables for handling unmeasured disturbances (Robust Control)
- Feed forward predictive control during Drum Switch events

Drum Switch Events

HCGO Draw Temperature (Deg C)

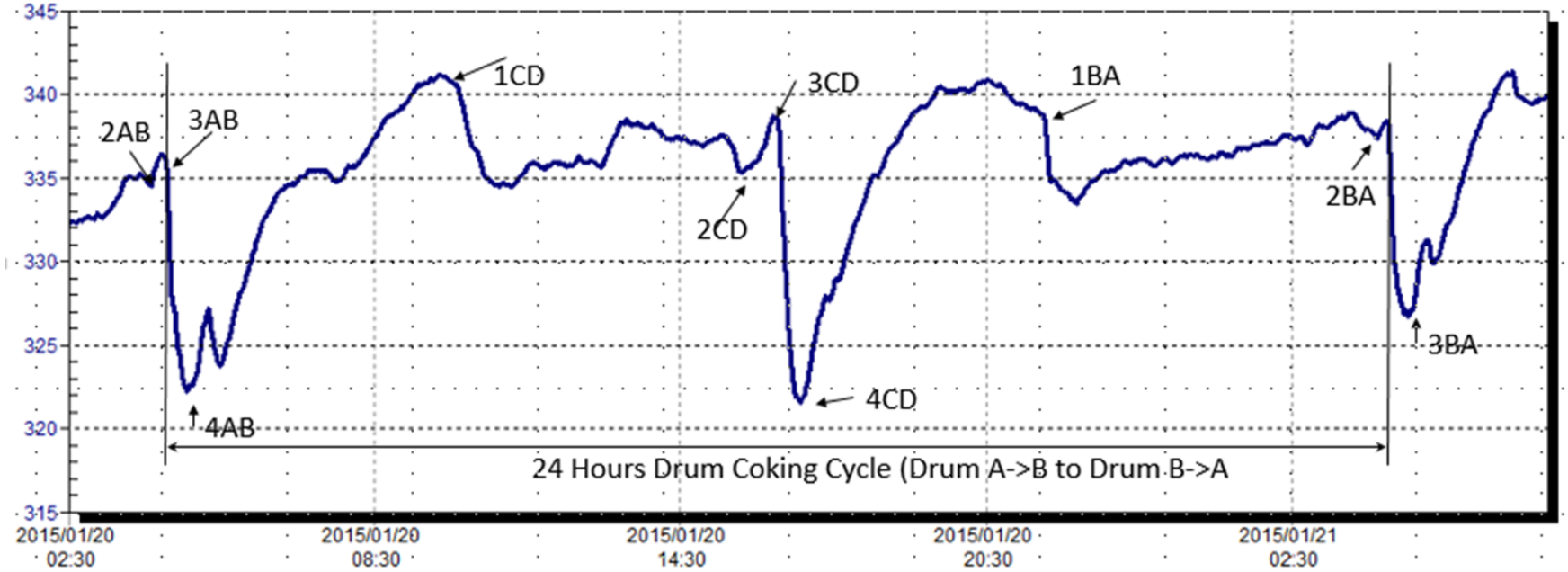

- **Two Drum pairs: A-B and C-D**
- **Drum Switch AB, BA, CD, DC**
  - Event 1 – Vapor heating starts
  - Event 2 – Vapor heating ends
  - Event 3 – Drum Switch
  - Event 4 – Drum Switch ends

Drum Switch Disturbance Functions

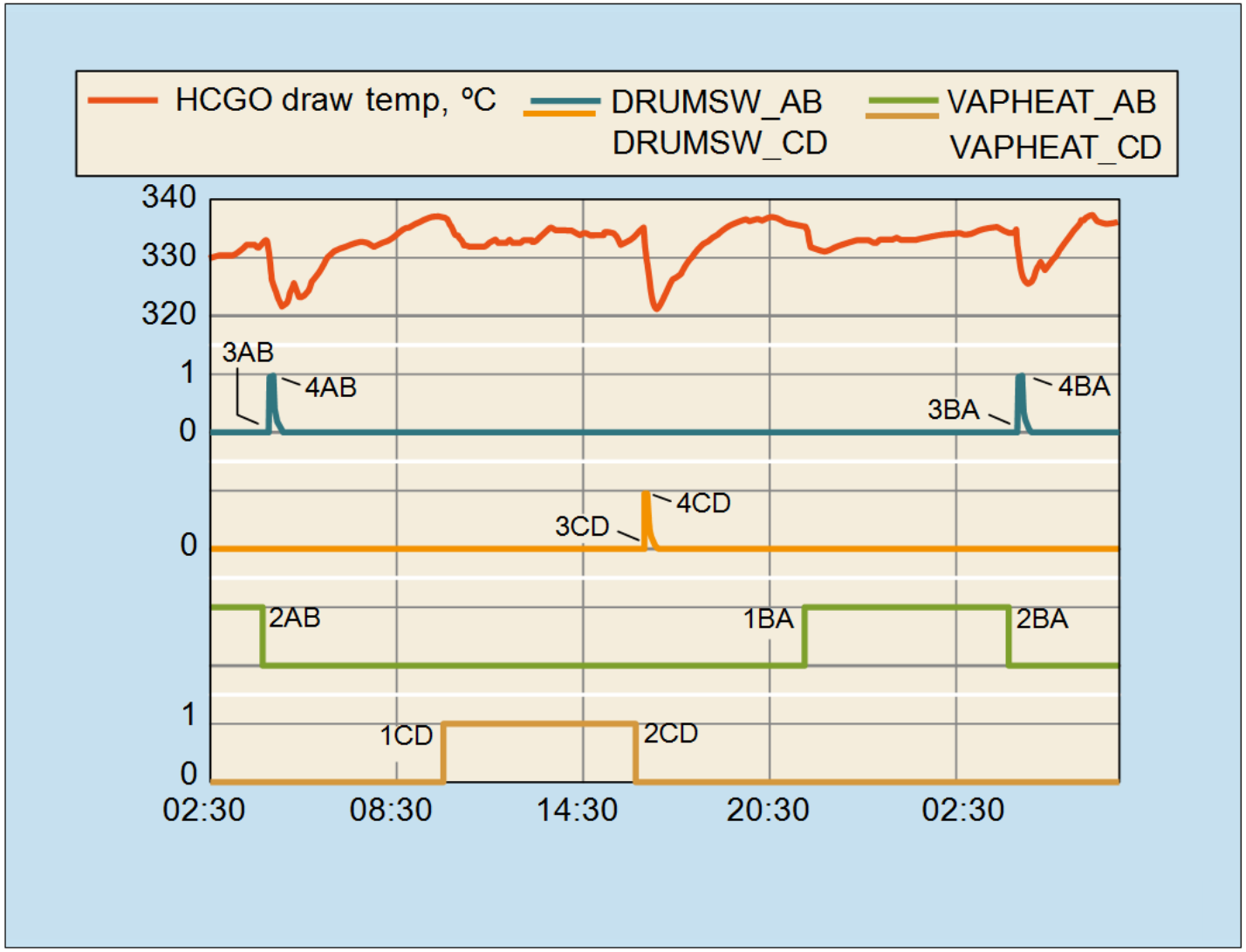

MISO Model Identification

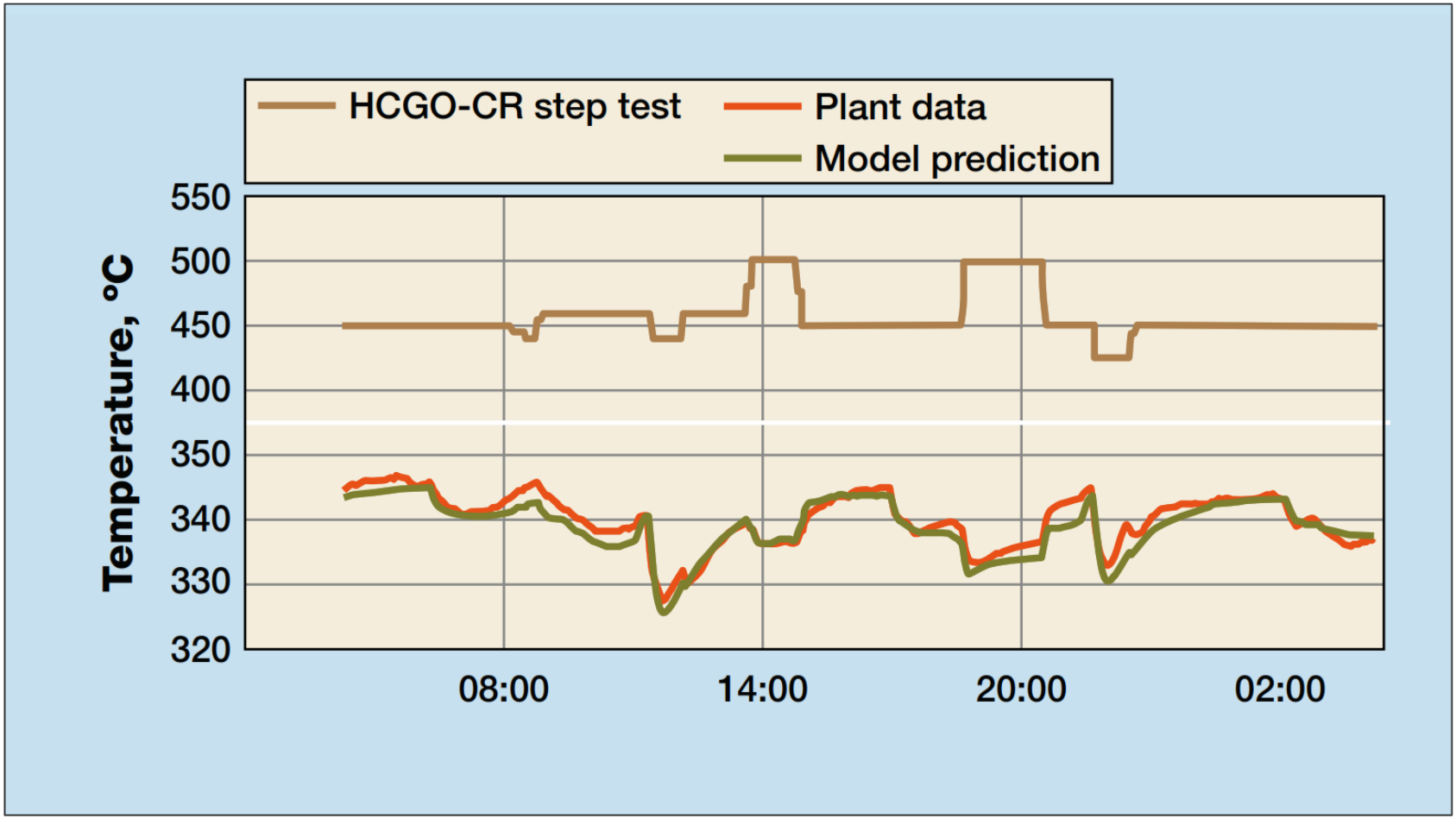

HCGO-CR Step test and Multivariable model identification

Grey Box model: Intermediate Variables

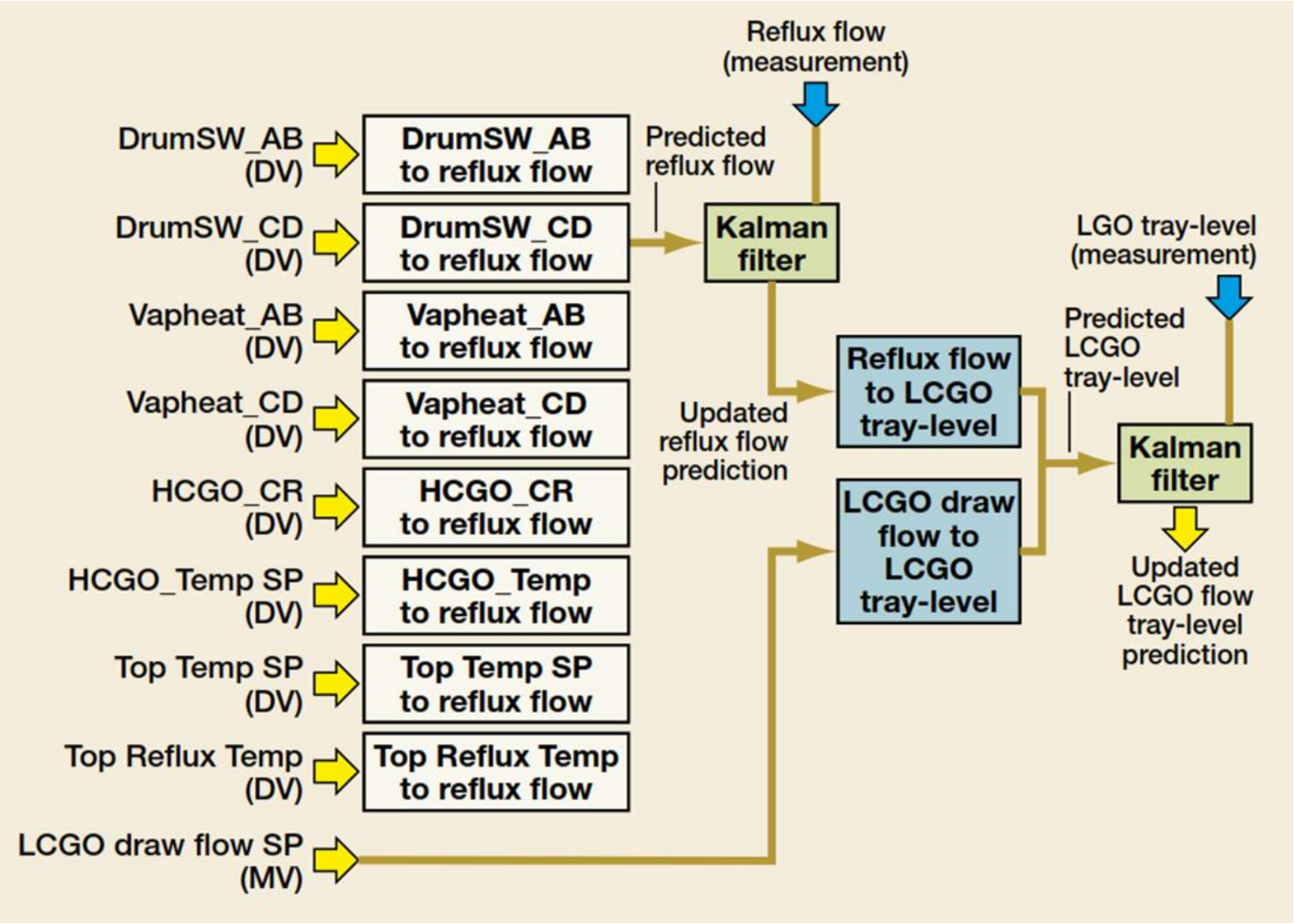

Functional Design Specification

- Two Main Controllers each with 2 sub-controllers
  - DCU feed controller; sub-controllers: F001A, F001B
  - Fractionator & Vapor Recovery Section
- Automatic detection of Vapor Heating and Drum Switch Events
- Drum Cycle time module for Feed Maximization
- Inferentials: Light Coker Gas Oil (LCGO) D95%, LCGO Flash Point, Light Naphtha (LN) D95%, Heavy Naphtha (HN) D95% & LPG Weathering

DCU APC-Objectives

- DCU Feed Controller
  - Maintain the specified unit throughput or maximize throughput within range if desired.
  - Pass balancing heaters F001A and F001B
  - Maintain pass flow deviations within range while honoring skin temperature constraints

DCU APC-Objectives

- DCU Main Fractionator Controller
  - Maintain product qualities within specified limits and ensure smooth operation during disturbances in vapor feed flow and temperature due to semi-batch coking operation
  - Maximize LCGO yield
  - Minimize Coker Naphtha
  - Maximize LCGO CR for heat recovery

DCU APC-Objectives

- DCU Vapor Recovery Section Controller
  - Maintain product qualities within specified limits and ensure smooth operation during disturbances in vapor feed flow and temperature due to semi-batch coking operation
  - Minimize steam consumption in stripper reboiler
  - Maximize LPG recovery in Gas Concentration section while preventing over absorption of lighter components
  - Maximize LPG yield

APC: Feed forward Disturbance Rejection

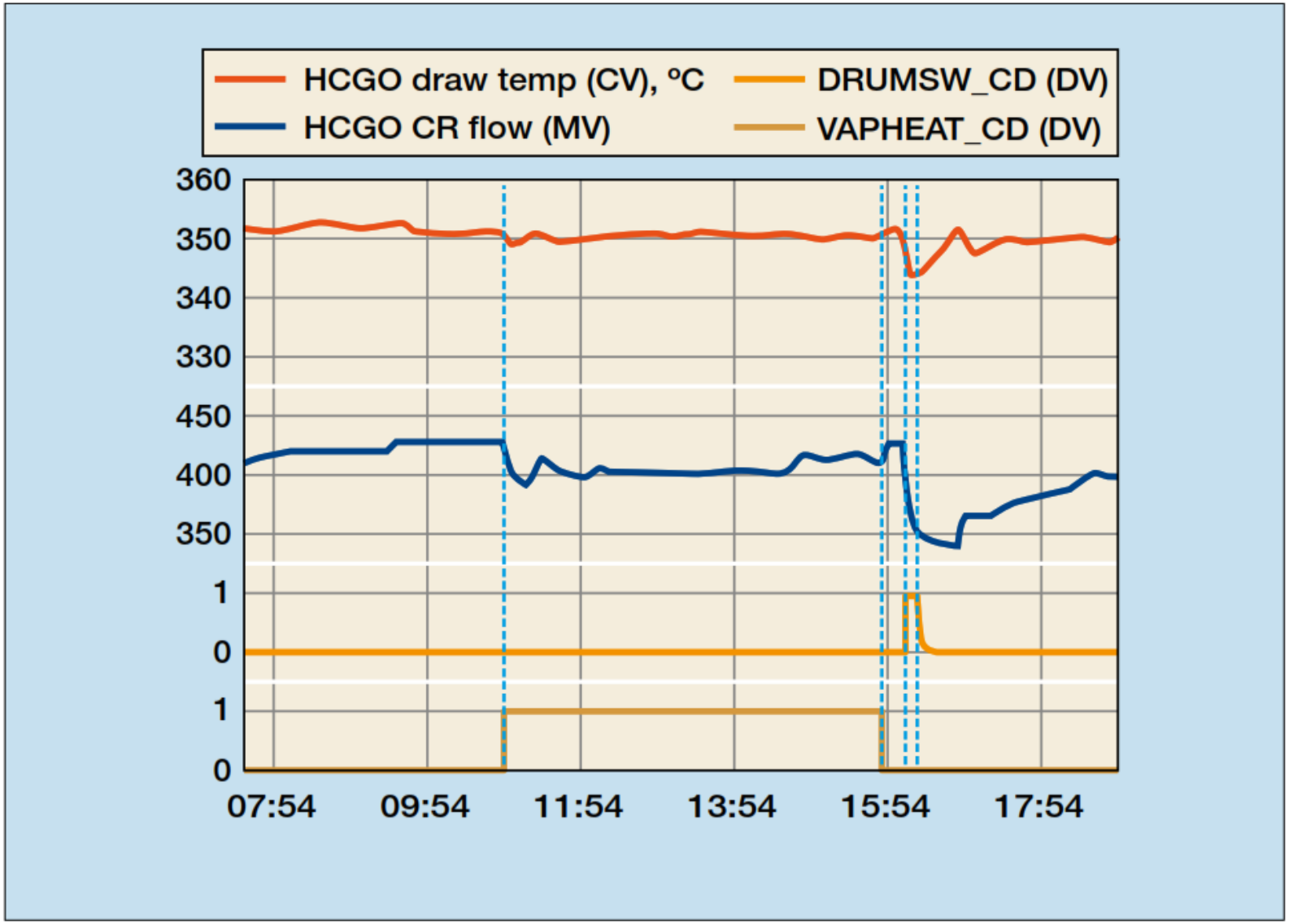

APC: Adjustment of HCGO Circulating Reflux

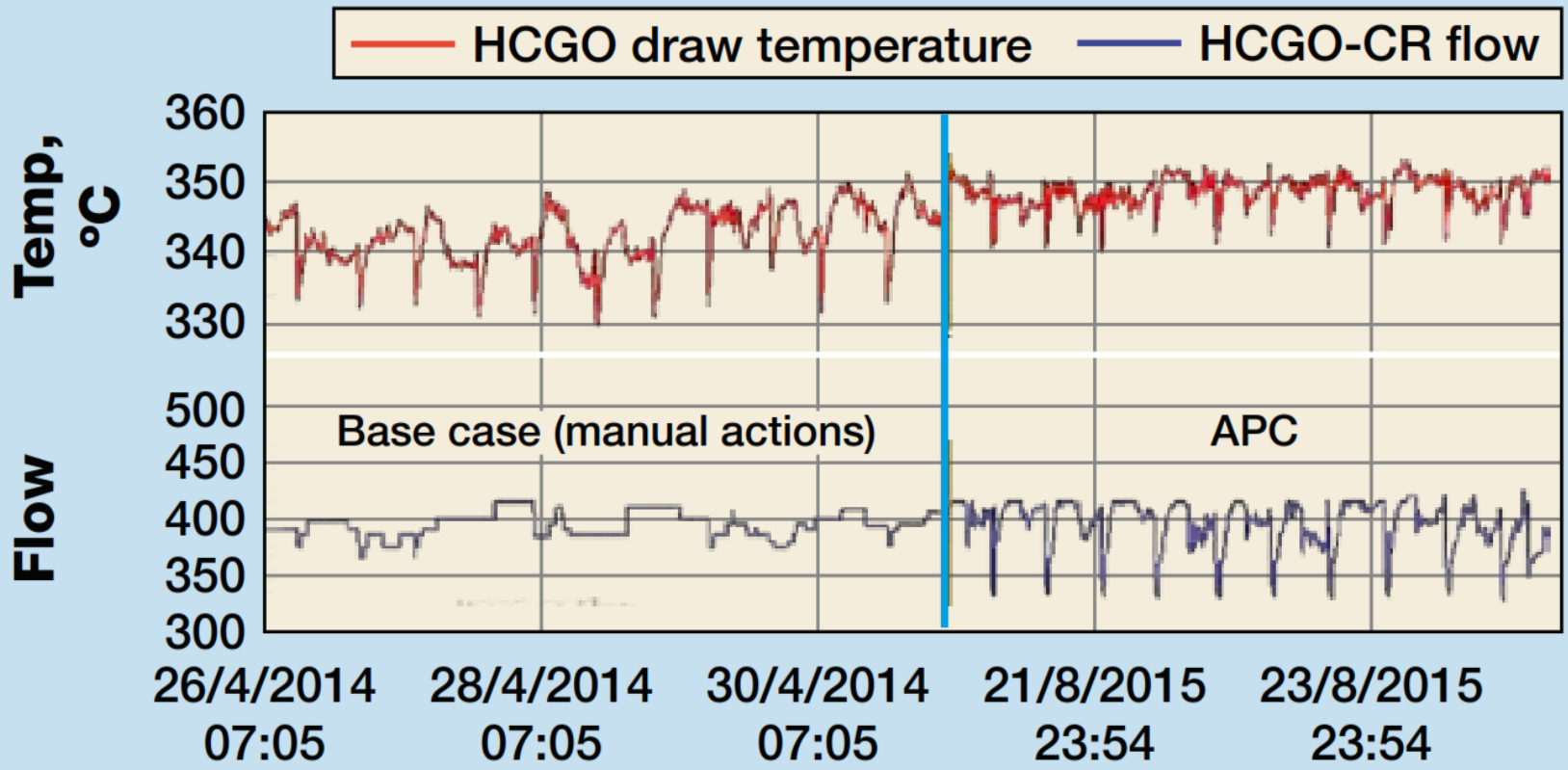

APC: LCGO Draw Tray Level Control

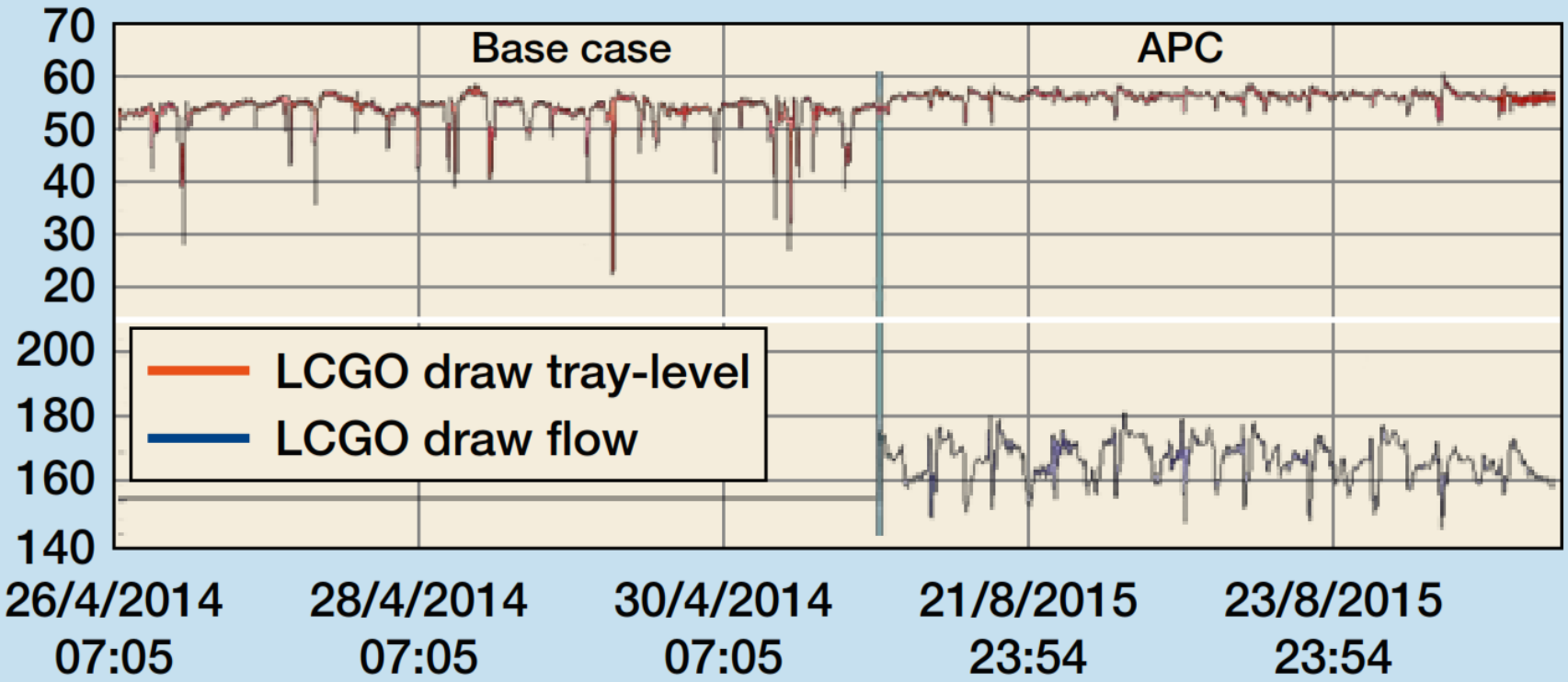

APC Benefits

- Process stabilization: Reduction in Variance of key operating conditions
- Yield improvement of Value Added Product (LPG & LCGO)
- Throughput Maximization by better Utilization of Drum Space within Specified Cycle Time
- Minimum Operator intervention in particular during Drum Switches.

Detailed article:

http://www.digitalrefining.com/article/1001312,Handling_delayed_coker_disturbances_with_APC.html