FCC Special Valves

Best Practices to Increase Performance, Reliability & Service Life

Mauro Natalini
Deputy Manager - Valve Engineering Dept.
REMOSA
Cagliari, Italy

Tel +39.070.2020237 / Mob +39.366.6891228
m.natalini@remosa-valves.com
www.remosa-valves.com

REFCOMM GALVESTON
April 30-May 2, 2014

CatCracking.com

REMOSA RACO ZIMMERMANN & JANSEN

OVERVIEW

Lifting a Diverter Valve

- **REMOSA** brief introduction
- **IMI Severe Service** Organization
- FCC Special Valves and Plant Layouts
- Case Studies (Slide Valves, Diverter Valve, VO Valve)
- Engineering Advantage and Technical Services
- Best Practice for Turnaround and Commissioning

REMOSA History

1955: Company founded in Cagliari, Italy

1980: Remosa becomes manufacturer of valves for the FCC (Fluid Catalytic Cracking) and Expander (PRT) applications. Shortly Remosa became a world leader in this niche.

1993: Remosa enters for the first time UOP Vendor list as FCC-Expander applications supplier.

2002: Remosa starts to design its own Control Systems and Actuators, in order to provide the Customers with a complete and integrated package.

2012: Remosa is acquired by IMI, joining the Severe Service Division.

IMI Severe Service

IMI SEVERE SERVICE

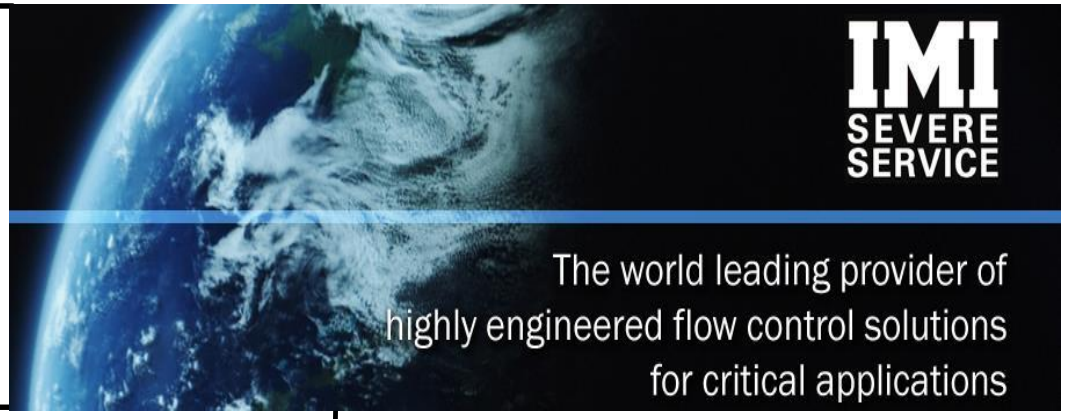

CCI

STI

IMI NUCLEAR

Truflo

Orton

RACO ZIMMERMANN & JANSEN

REMOSA

Th. Jansen-Armaturen GmbH

FCCU - Fluidized Catalytic Cracking Unit

Valve Installations

Engineering Advantage

1A - Regenerated Catalyst Slide Valve (Single Disc)
1B - Spent Catalyst Slide Valve (Single Disc)
1C - Recirculated / Cooled Catalyst Slide Valve (Single Disc)
1D - Flue Gas Slide Valve (Double Disc)
2 - Double Disc Through Conduit (Double Disc) - Isolation

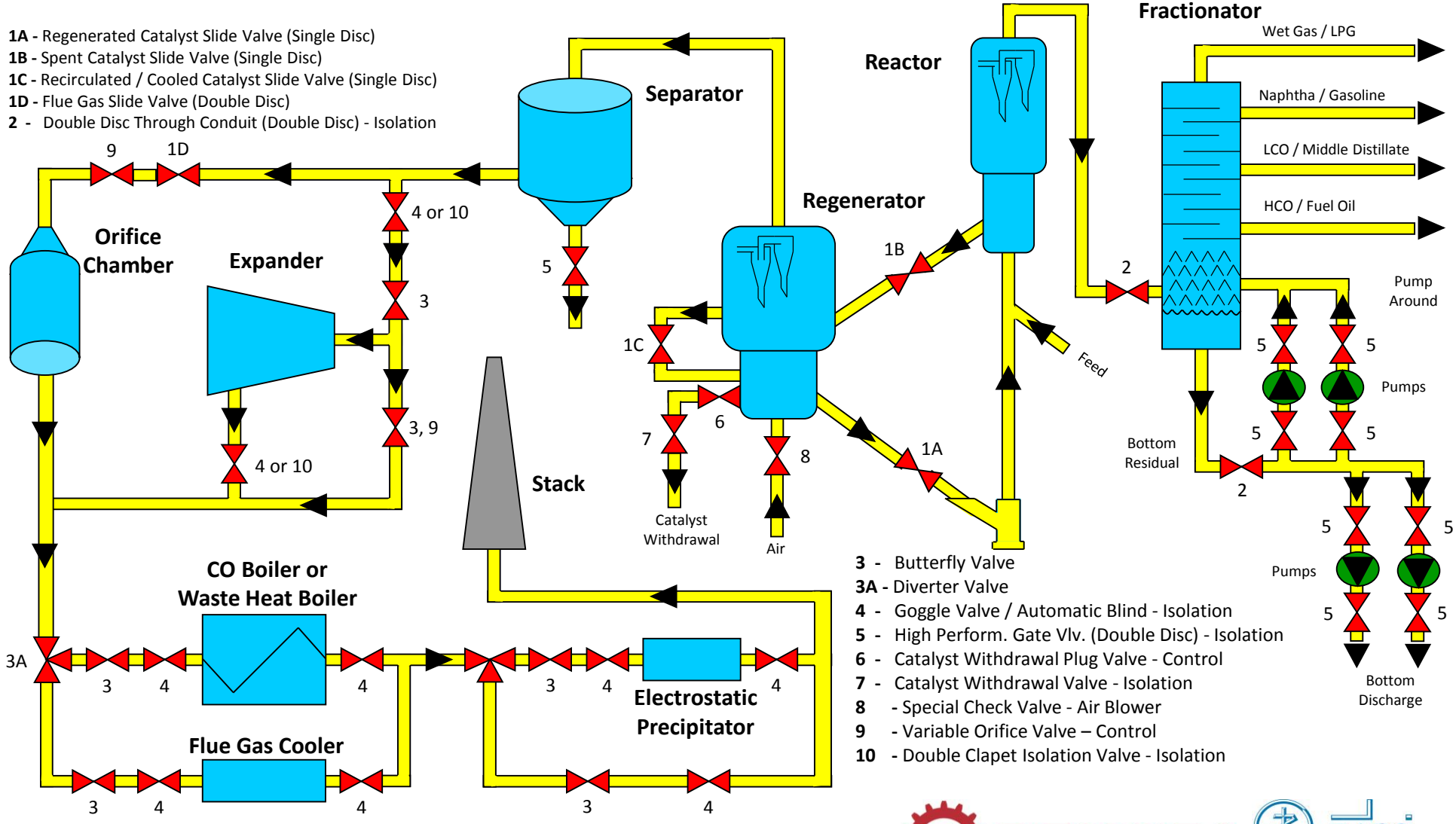

3 - Butterfly Valve
3A - Diverter Valve
4 - Goggle Valve / Automatic Blind - Isolation
5 - High Perform. Gate Vlv. (Double Disc) - Isolation
6 - Catalyst Withdrawal Plug Valve - Control
7 - Catalyst Withdrawal Valve - Isolation
8 - Special Check Valve - Air Blower
9 - Variable Orifice Valve – Control
10 - Double Clapet Isolation Valve - Isolation

FCCU - Fluidized Catalytic Cracking Unit

REMOSA / Z&J Products

Engineering Advantage

Slide Valve (Single Disc)	 
Slide Valve (Double Disc)	 
Butterfly Valve (PRT, Flue Gas Bypass)	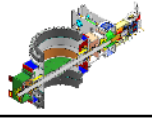 
Double Clapet Expander Isolation Valve	 
Double Disc Through Conduit Isolation Valve	 
Goggle Valve / Automatic Blind Isolation Valve	 
Special Check Valve	 
Actuating / Control Systems	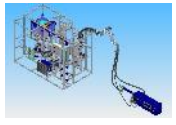 

Diverter Valve (Pendulum Type)	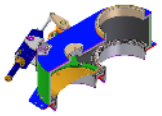 
Diverter Valve (Linear Type & Flip-Flop)	 
Variable Orifice Valve (PRT, Flue Gas Bypass)	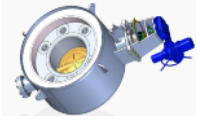 
Plug Valve	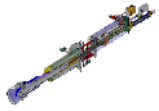 
Catalyst Withdrawal Valve	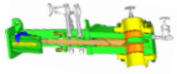 
High Performance Gate Valve	 
Special Customized Equipments	 
Remote PLC Cabinets (for FCC, DC, Catofin, others)	 

REMOSA RACO ZIMMERMANN & JANSEN

SLIDE VALVE : *Typical End-User Requests*

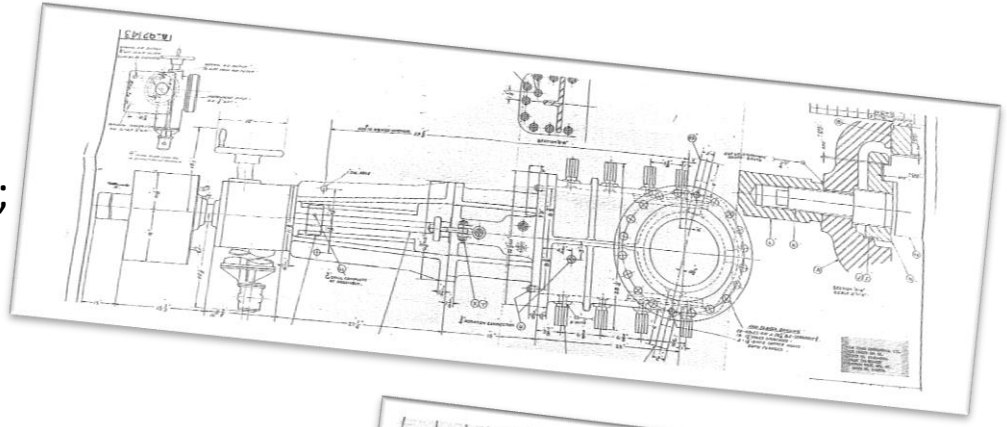

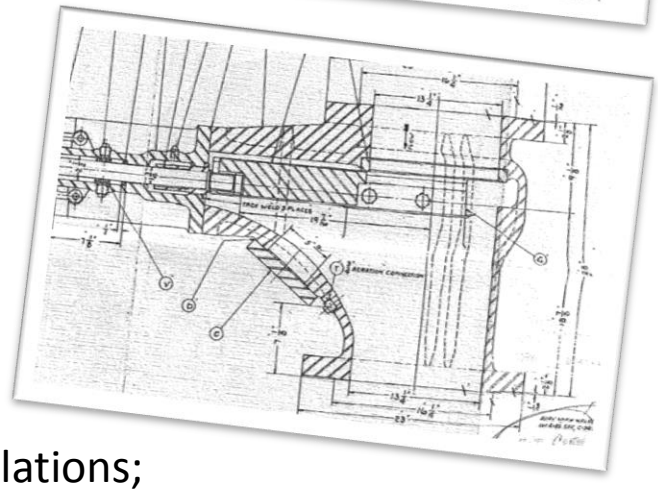

- Replace the old valves respecting existing space;
- Reuse existing actuating system and/or control unit;
- New Process operating conditions;
- Reduce erosion of internals components;
- Verify valve performance using new process conditions;
- Eliminate mechanical tightness problems and leakages;
- Increase valve “rangeability” to improve control of FCC unit;
- Apply Latest Design Codes (e.g. ASME BPV, B31.3);
- Apply Latest Country Laws (e.g. PED, ABSA) and Environmental Regulations;
- Decrease/avoid emergency shutdown due to valve before scheduled T/A;

SLIDE VALVE : Replacement of “old” casting valves

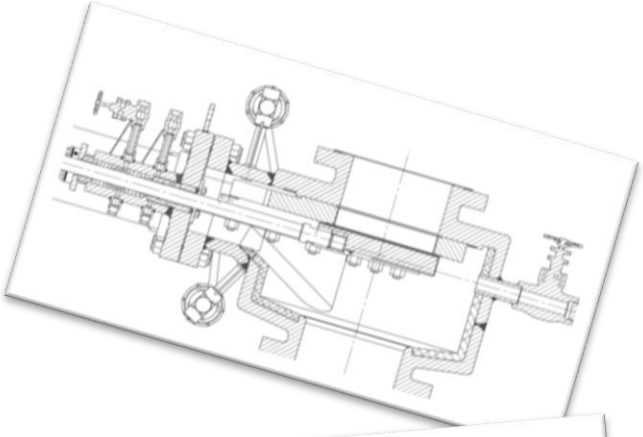

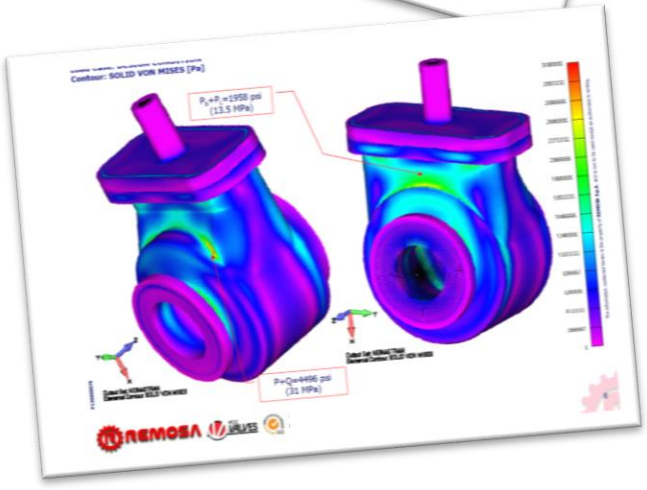

REMOSA Solutions:

- Re-Check Process Conditions and valve opening.
Often operating conditions change during the years hence the valve has to be properly re-designed in order to optimize the performance (e.g. reduce erosion on internals, increase rangeability);

- Verify if existing actuating/control system is still in accordance with Latest Specifications (total stroke, stroking time, mechanical coupling & interfaces);

- Replace “cast” valve body with a “fabricated” body designed using plates and/or forgings as per New Specifications and Codes;

- Old Valves are no more in accordance with Latest Design Codes & Country Laws; new calculations and certifications are provided.

- perform FEA (Structural, Thermal, Fatigue analysis) and CFD in order to optimize the valve performance and service life.

SLIDE VALVE: Replacement of “old” casting valves

Old “Casting” Valves

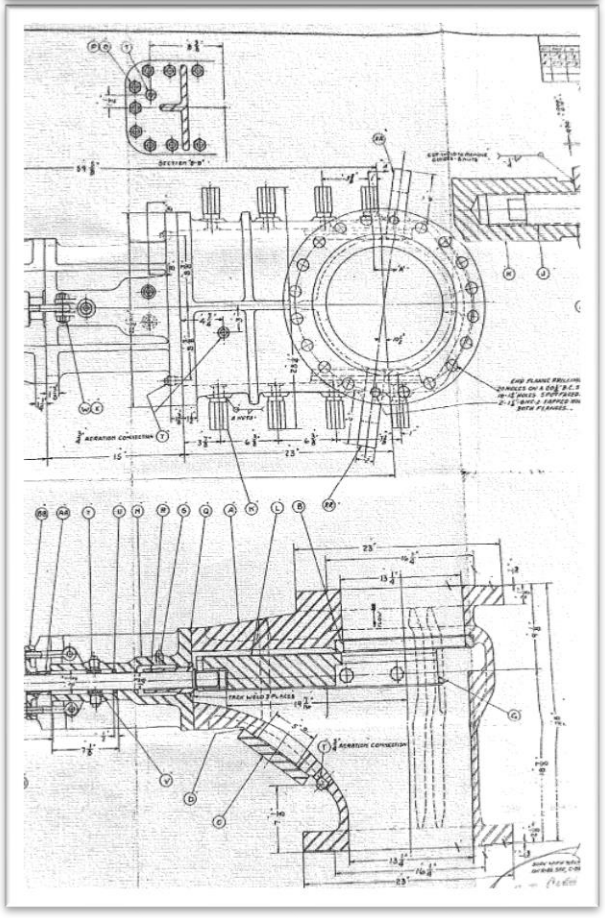

New REMOSA “fabricated” Valves

SLIDE VALVE: *"…have more Service Life ! "*

Example *"Eliminate mechanical tightness problems"*

- Existing Valve (not manufactured by REMOSA) had "sticking" problems due to wrong Cold Set Clearances between Disc and Orifice Plate.
- Cold vertical clearances were not enough large to prevent the contact between disc and orifice plate during the emergency trip condition.
- REMOSA changed the design in order to avoid contacts and increase reliability of the new valve.

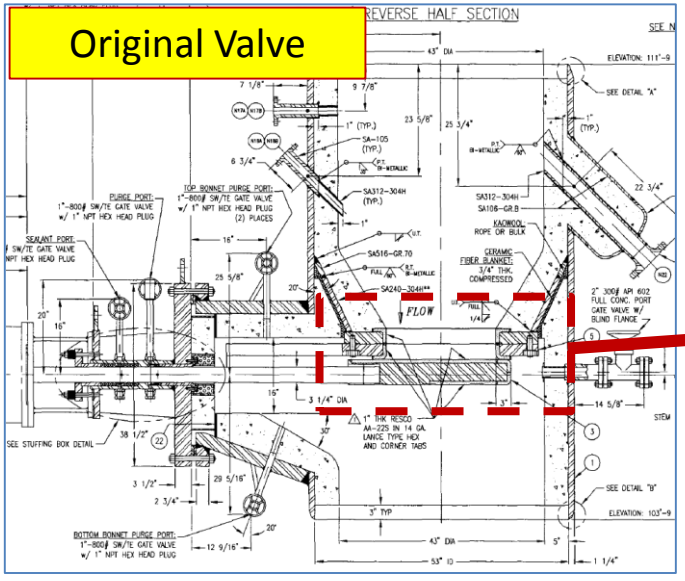

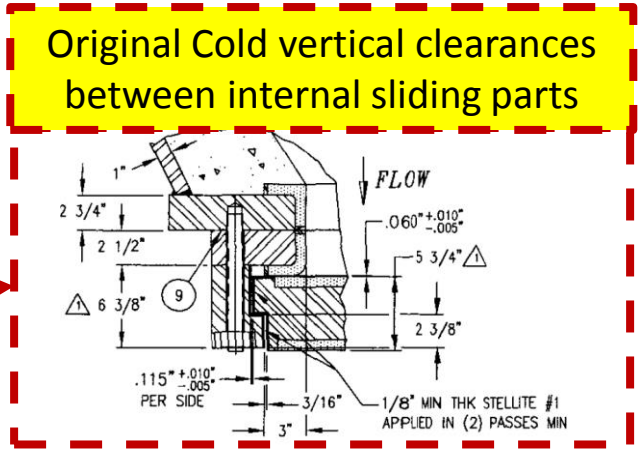

REMOSA RACO ZIMMERMANN & JANSEN

SLIDE VALVE: *"…have more Service Life ! "*

Example *"Eliminate mechanical tightness problems"*

A FEA Thermal analysis followed by a Mechanical analysis has been performed in order to evaluate the deformations of the internal parts of the original valve due to the thermal gradients and differential pressure, induced during the emergency trip condition.

- analysis revealed that the distortion of the internal parts did not take into account severe thermal gradient imposed. The deformation was such that disc and orifice plate resulted in contact.

- typical cold vertical clearance were not enough large to prevent the contact between disc and orifice plate during the emergency trip condition.

FEA of original Valve

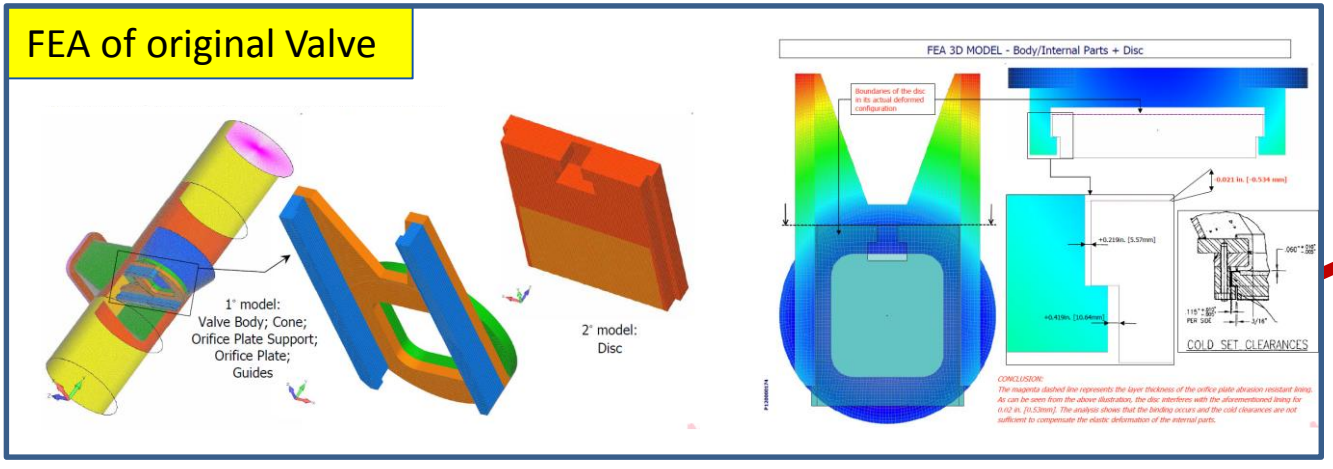

Old Clearances

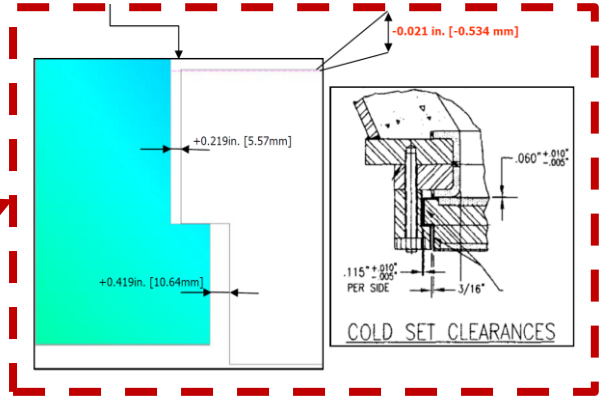

SLIDE VALVE: *"…have more Service Life ! "*

REMOSA Solution:

- Opening modified as per New Customer Specifications;

- FEA of the new Valve to evaluate the deformations of the internal parts of the valve due to the thermal gradients and differential pressure, induced during the upstream high emergency condition;

- Vertical cold clearances increased to take into account emergency condition.

FEA of "New" Valve

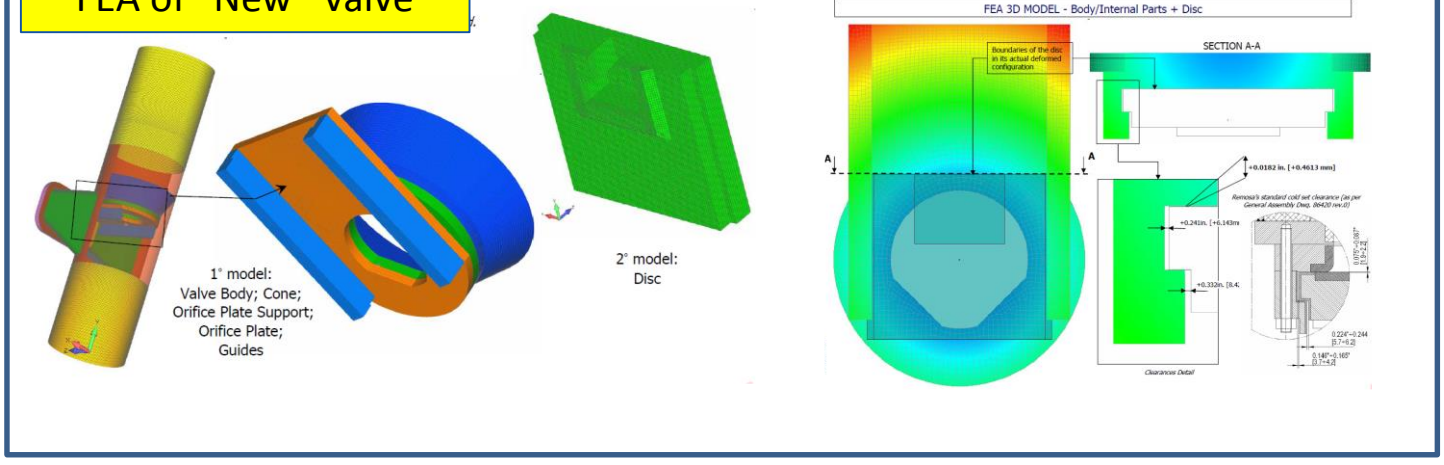

New Clearances

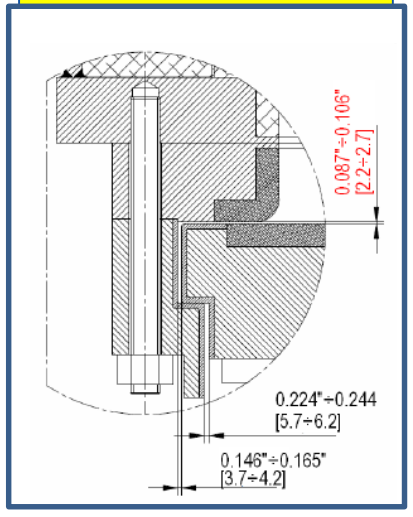

SLIDE VALVE: *"Revamping an old valve during the T/A"*

Old Valve (*Not Manufactured by REMOSA*)

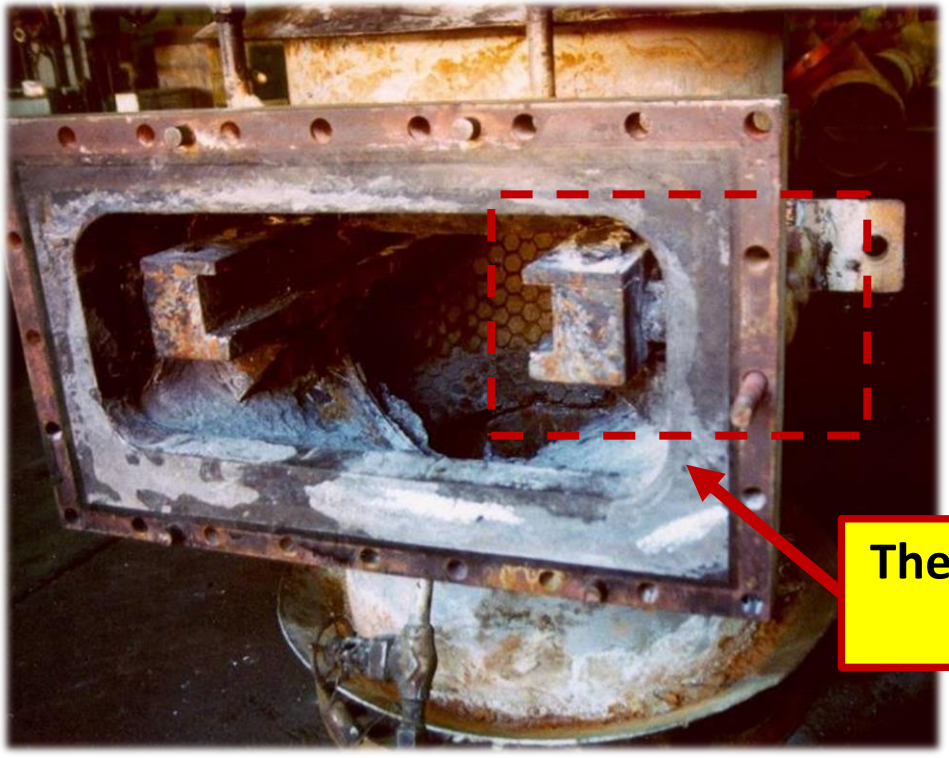

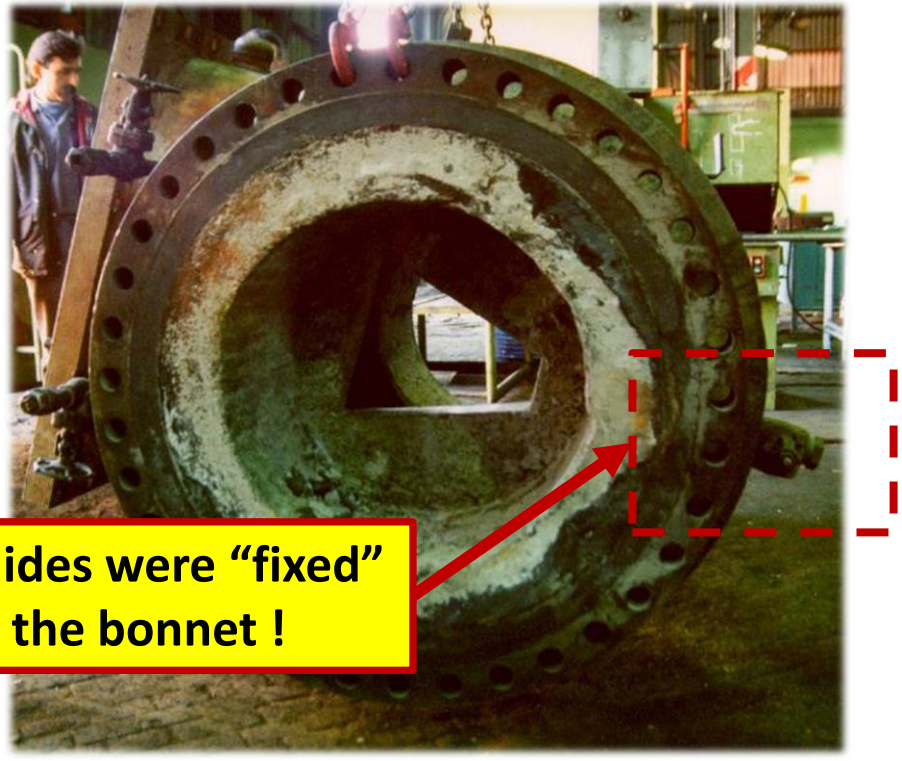

The guides were "fixed" to the bonnet !

SLIDE VALVE: *"Revamping an old valve during the T/A"*

Old Valve (*Not Manufactured by REMOSA*)

Disc

Orifice Plate cutting

Guide bolts protection cutting

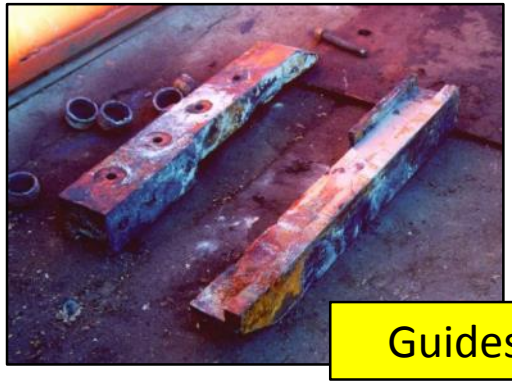

Guides

Orifice Plate

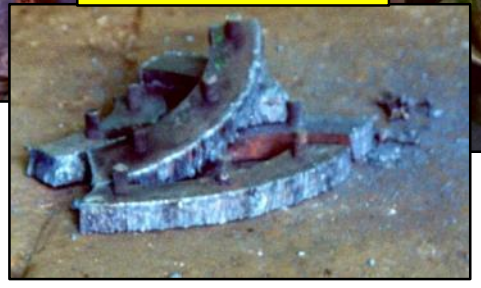

SLIDE VALVE: *"Revamping an old valve during the T/A"*

***REMOSA* Repairs & Improvements**

PWHT of the new Wear Plate welding

New Wear Plate machining

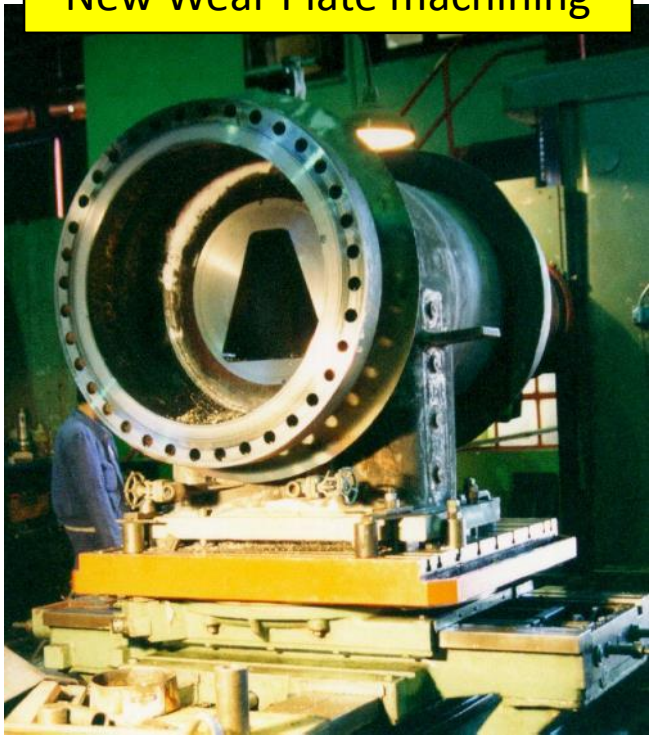

Refractory installation

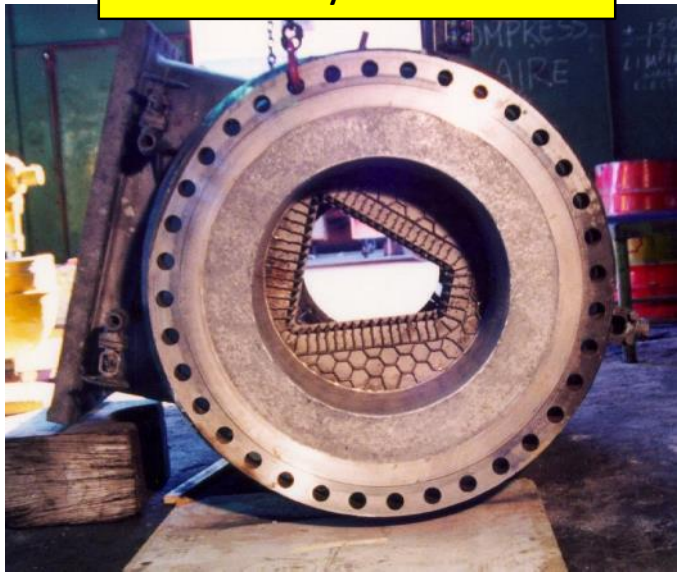

SLIDE VALVE: *"Revamping an old valve during the T/A"*

***REMOSA* Repairs & Improvements**

New Valve Internals "Suspended Type"

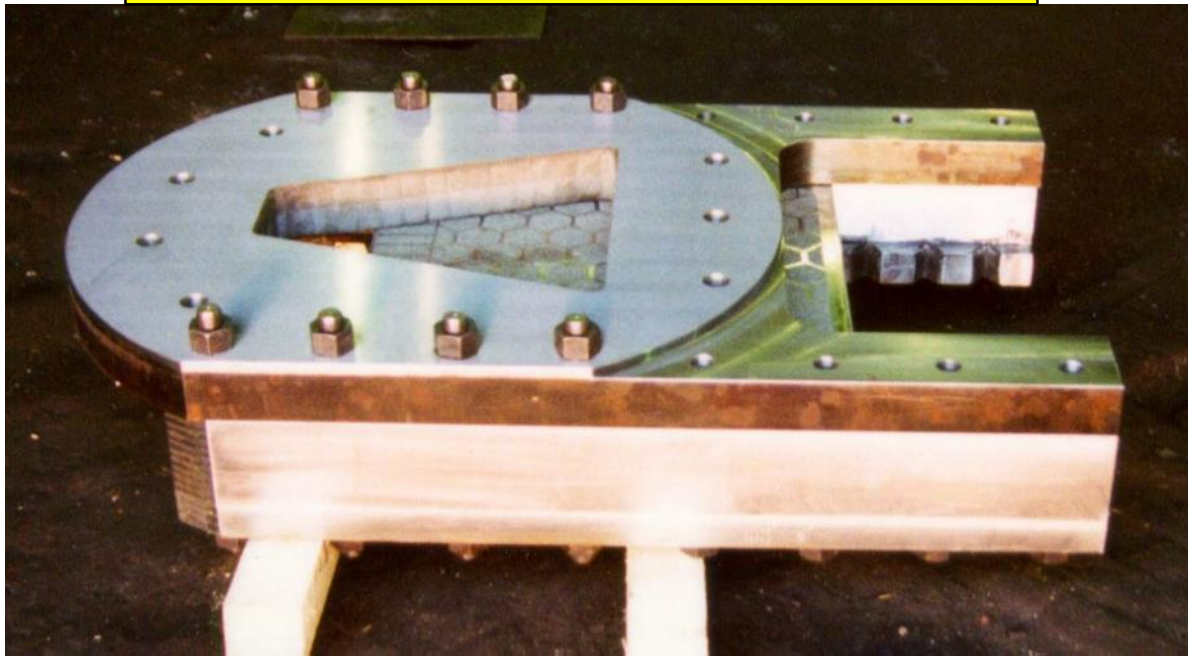

Valve modified by **REMOSA**

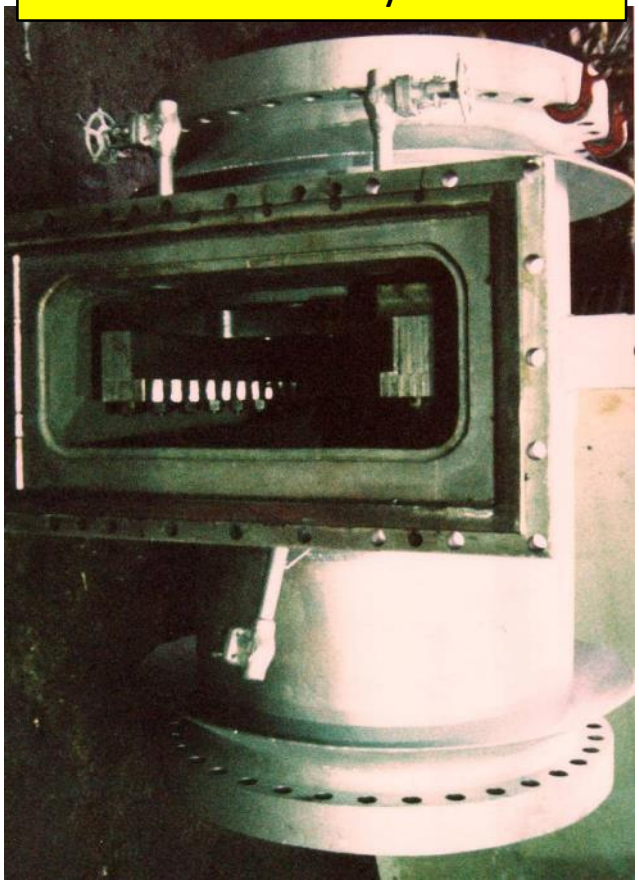

ORIFICE CHAMBER vs VARIABLE ORIFICE VALVE

Pressure Drop vs Flowrate

Flow from TSS		Orifice Chamber ΔP	VO Stack ΔP
Design	100%	100%	100%
High Flow	150%	225%	100%
Low Flow	50%	25%	100%

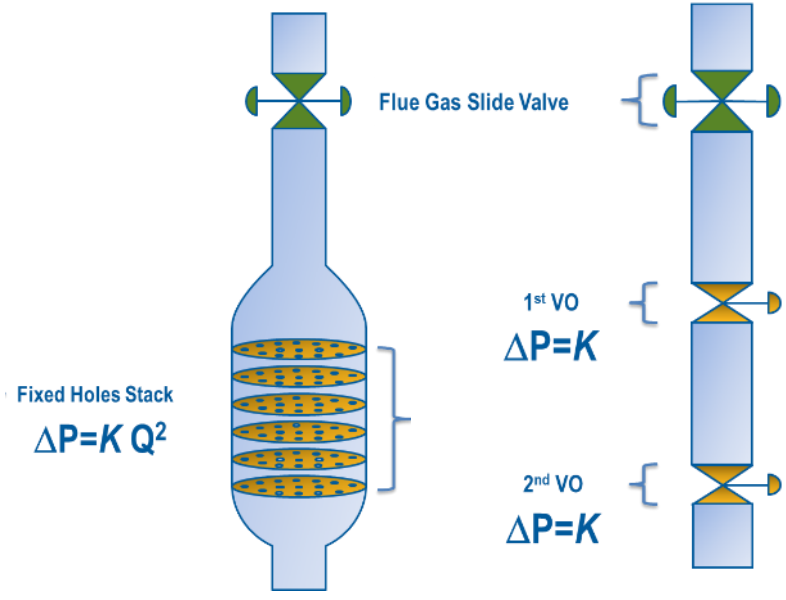

VARIABLE ORIFICE VALVE: more rangeability when the flowrate changes !

3D of VO Valve

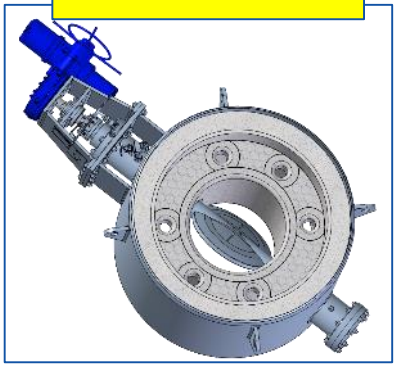

VO Valve Installed

ORIFICE CHAMBER vs VARIABLE ORIFICE VALVE

VARIABLE ORIFICE VALVE: more rangeability when the flowrate changes !

REMOSA **CFD analysis** can be provided in order to ensure the best interaction between pipe and valves and choose the best layout.

Such analysis is carried out to maximize valve performance and to ensure a **long-lasting service of the plant**, in terms of flow-dynamic behavior and erosion resistance of the valve, for both single-phase and two-phases flows.

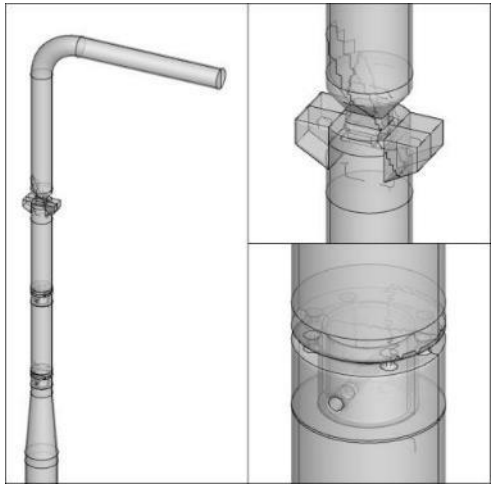

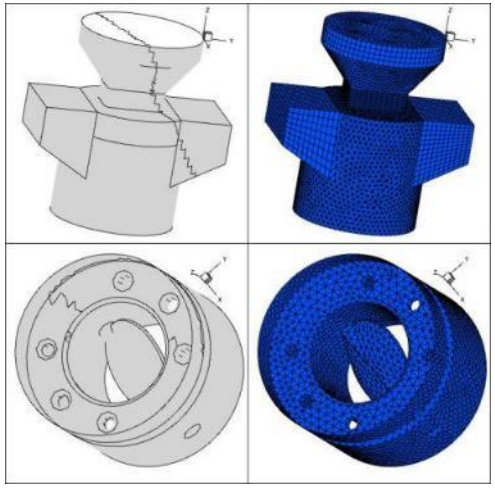

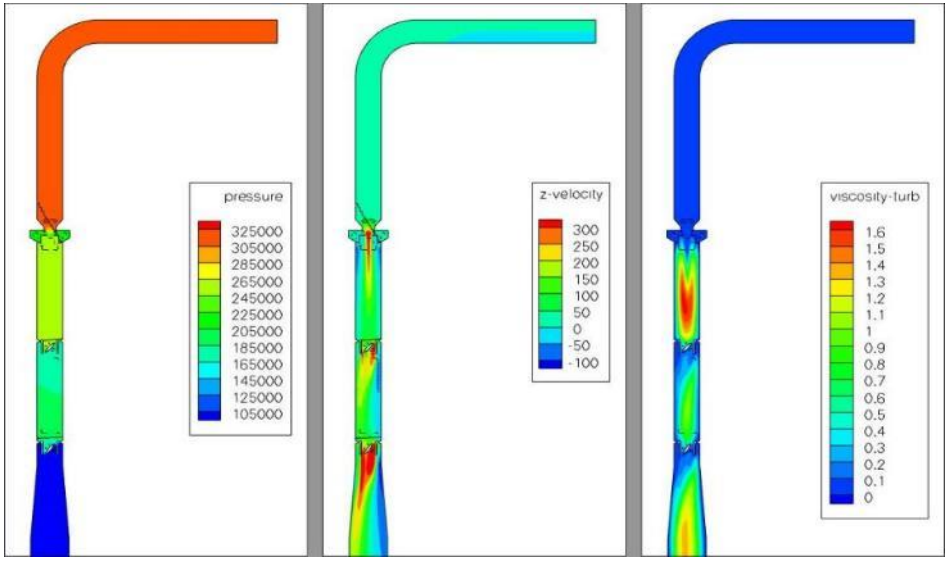

ORIFICE CHAMBER vs VARIABLE ORIFICE VALVE

VARIABLE ORIFICE VALVE: more rangeability when the flowrate changes !

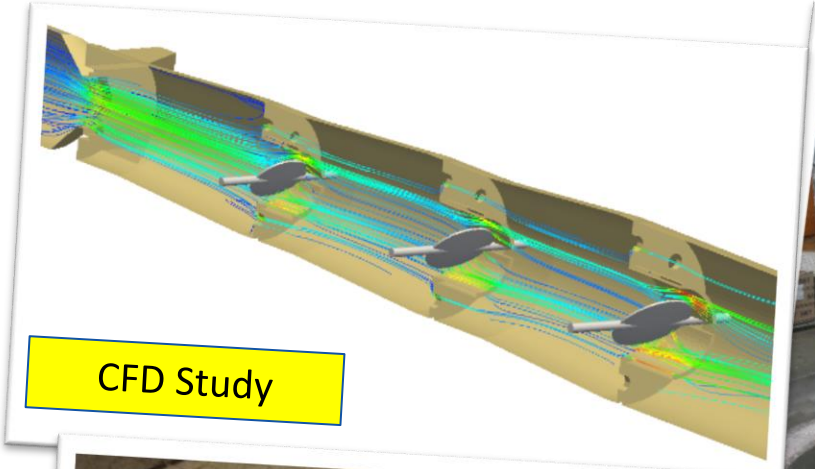

CFD Study

VOVs Field Inspection

at REMOSA Workshop

VOVs during SAT

FLUE GAS DIVERTER VALVE: "*… to reduce the emissions for the plant*"

- Flue Gas Diverter Valve, linear design;
- The diverter valve control the flow coming from third stage separator directing it to the CO Boiler or to a bypass stack;
- Enviromental Regulations are constantly decreasing the emissions limits for the plants, so also for these valves;
- Due to the poor performance of the existing diverter (not supplied by Remosa) the Customer asked Remosa to design and manufacture a new diverter valve able to meet an extremely low leakage limit (**below 0,05% of Total Flow**);

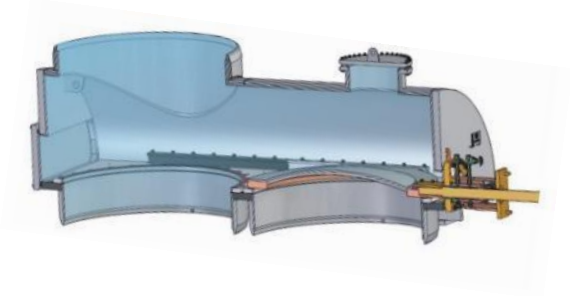

FLUE GAS DIVERTER VALVE: "*… to reduce the emissions for the plant*"

- The leakage test, witnessed by German TUV Inspector, showed a performance much better than the (strict) limit imposed by Customer (**below 0,05% of Total Flow**).

Sketch of Leakage Test Set-up

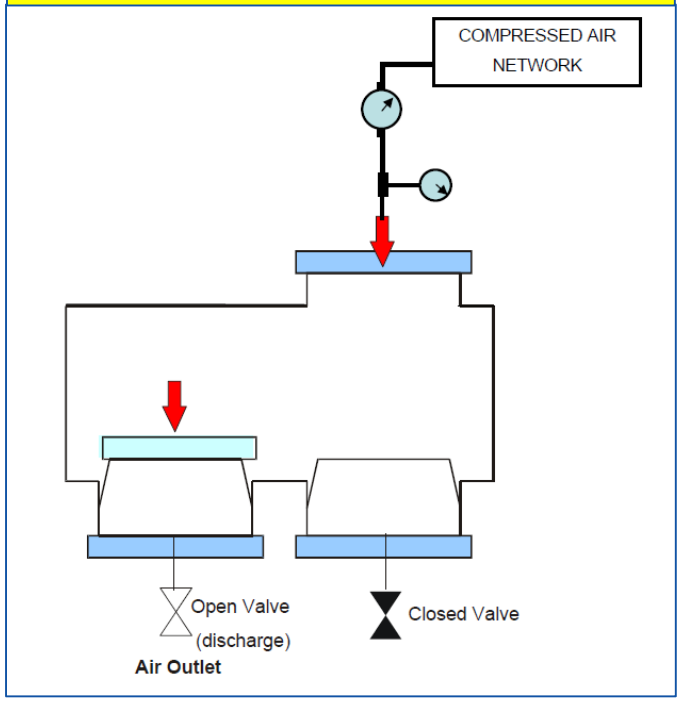

Leakage Test Set-up

REMOSA Expertise

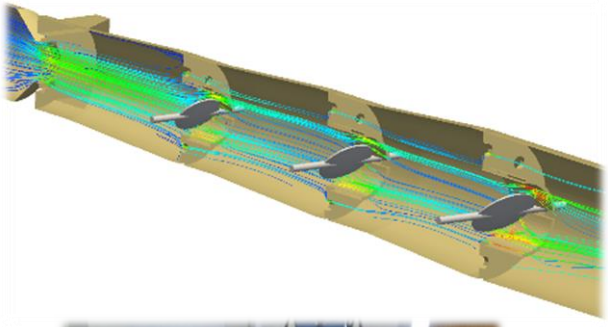

- **Tailor-made solutions** according to customer's needs / standards and to local regulations
- Overall production capabilities (**100% in-house manufacturing**)
- **High-End Engineering** capabilities (FEM, CFD, 3D CAD) performed in-house by experienced designers with practical on-field background
- Wide **R&D and Testing** Capabilities (Hot Stroke, Leakage Test, FAT)
- **Field Service** activities performed by skilled, trained and experienced personnel

FIELD SERVICE

Since 1955, REMOSA has been operating in the field of industrial maintenance and specifically within refineries and petrochemical plants.

Proven experience with excellent problem solving for any engineering, retrofitting and repair work for any type of valves installed in FCC Units and Expander Power Recovery Units.

Prompt action reducing any refinery shutdown time by using our own in-house designed machine allowing the easy replacement of the internals, along with the modification of the valve inside geometry, without removing the valve from the unit.

FCC Worldwide Network:

- Cagliari, ITALY (**REMOSA** - Headquartier)
- Duren, GERMANY (Z&J – Headquartier)
- Houston, USA (Z&J / **REMOSA** – Facilities)
- Vanderbijlpark, SOUTH AFRICA (Z&J – Facilities)
- Shanghai, PR CHINA (Z&J– Facilities)

IMPROVEMENTS:

- **More Local Support:** Customer Care, Consultant and Training;
- **More Prompt Action:** Engineers and Specialists ready to go around the world in less then 24hrs;
- **More Expertise & Service**: Reliable Repairs, Refurbishments and Revamping Projects;

FIELD SERVICE

PREDICTIVE MAINTENANCE

- **MINIMIZING** TOTAL DOWNTIME
- **MAINTAINING** RELIABLE PERFORMANCE
- **MAXIMIZING** ELAPSED TIME BETWEEN TURNAROUNDS

INCREASING PLANT PERFORMANCE

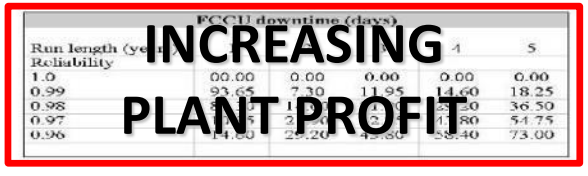

INCREASING PLANT PROFIT

FIELD SERVICE

MINIMIZING TOTAL DOWNTIME

Plan the turnaround, with a qualified valve/control system manufacturer, no later than 6 months prior to the scheduled shutdown

- Review the report from the previous turnaround (if available)
- Inspect the spare parts in stock and record their existing condition
- Walk through the unit and identify each valve/actuator and their location to determine necessary manpower and equipment required
- Discuss any operation problems (recorded or not recorded) with the valves/actuators (if any)
- Evaluate current process against current design
- Discuss customer's expectation for the upcoming shutdown
- Review customer safety plans, trainings and T/A scheduling

FIELD SERVICE

MINIMIZING TOTAL DOWNTIME

- Recommendation for the necessary level of spare parts must have “on hand” for the Turnaround
- Proposed Turnaround procedure
- Definition of Valve Contractor work
- Definition of Valve Contractor responsibility
- Planning and Scheduling of Turnaround activities

No surprises when the Turnaround starts !

FIELD SERVICE

MAXIMIZING ELAPSED TIME BETWEEN TURNAROUNDS

Verify with a qualified valve manufacturer the valve performance.

Check the correspondence of valve design with actual process condition

MAJOR CAUSES OF FAILURE

(Each of these can be evaluated during pre-turnaround)

- Failure of parts
- Catalyst build up on the guides and disc running surfaces
- Excessive wear on internals
- Internal bolts failure

FIELD SERVICE

MAINTAINING RELIABLE PERFORMANCE

Selection of a qualified valve contractor

PRIMARY QUALITY OF VALVE CONTRACTOR

- Valve manufacturing expertise
- In-house valve engineering expertise
- Complete shop capability for field support
- Valve modification experience
- Excellent safety record
- Quick response terms

REMOSA Reliability in Numbers

Over **700 FCC Special Valves** supplied up to now

Over **350 FCC Actuating/Control Systems** supplied up to now

Over **45 Countries** in the world

Over **4500 cumulative years** of operation

Thank You for your attention!